SECTION TM
TRANSAXLE & TRANSMISSION

CONTENTS

CVT: RE0F10J

PRECAUTION 6

PRECAUTIONS 6
Precaution for Supplemental Restraint System (SRS) "AIR BAG" and "SEAT BELT PRE-TENSIONER" 6
Precaution for Procedure without Cowl Top Cover.....6
Precautions for Removing Battery Terminal 6
Precaution for On Board Diagnosis (OBD) System of CVT and Engine 7
Precaution for TCM and Transaxle Assembly Replacement 7
Removal and Installation Procedure for CVT Unit Connector 7
Precaution 9
Service Notice or Precaution 9

PREPARATION 11

PREPARATION 11
Special Service Tools 11
Commercial Service Tools 11

SYSTEM DESCRIPTION 12

COMPONENT PARTS 12

CVT CONTROL SYSTEM 12
CVT CONTROL SYSTEM : Component Parts Location 12
CVT CONTROL SYSTEM : TCM 14
CVT CONTROL SYSTEM : Transmission Range Switch 14
CVT CONTROL SYSTEM : Primary Speed Sensor 14
CVT CONTROL SYSTEM : Output Speed Sensor...14
CVT CONTROL SYSTEM : Input Speed Sensor....15
CVT CONTROL SYSTEM : CVT Fluid Temperature Sensor 15
CVT CONTROL SYSTEM : Primary Pressure Sensor 15
CVT CONTROL SYSTEM : Secondary Pressure Sensor 16
CVT CONTROL SYSTEM : Primary Pressure Solenoid Valve 16
CVT CONTROL SYSTEM : Secondary Pressure Solenoid Valve 16
CVT CONTROL SYSTEM : Select Solenoid Valve 17
CVT CONTROL SYSTEM : Torque Converter Clutch Solenoid Valve 17
CVT CONTROL SYSTEM : Line Pressure Solenoid Valve 17
CVT CONTROL SYSTEM : Overdrive Control Switch 17
CVT CONTROL SYSTEM : O/D OFF Indicator Lamp 17
CVT CONTROL SYSTEM : Shift Position Indicator 18
CVT CONTROL SYSTEM : G Sensor 18

SHIFT LOCK SYSTEM 18
SHIFT LOCK SYSTEM : Component Parts Location 19

STRUCTURE AND OPERATION 20

TRANSAXLE 20
TRANSAXLE : Cross-Sectional View 20
TRANSAXLE : Operation Status 21
TRANSAXLE : Transaxle Mechanism 21
TRANSAXLE : Oil Pressure System 23
TRANSAXLE : Component Description 24

FLUID COOLER & FLUID WARMER SYSTEM 24
FLUID COOLER & FLUID WARMER SYSTEM : System Description 25

SHIFT LOCK SYSTEM 25
SHIFT LOCK SYSTEM : System Description 26

cardiagn.com

SYSTEM 28

CVT CONTROL SYSTEM 28
CVT CONTROL SYSTEM : System Description ... 28
CVT CONTROL SYSTEM : Fail-safe 29
CVT CONTROL SYSTEM : Protection Control 32

LINE PRESSURE CONTROL 33
LINE PRESSURE CONTROL : System Description 33

SHIFT CONTROL 34
SHIFT CONTROL : System Description 34

SELECT CONTROL 36
SELECT CONTROL : System Description 36

LOCK-UP CONTROL 37
LOCK-UP CONTROL : System Description 37

ON BOARD DIAGNOSTIC (OBD) SYSTEM 39
Diagnosis Description 39
GST (Generic Scan Tool) 39

DIAGNOSIS SYSTEM (TCM) 40

DIAGNOSIS DESCRIPTION 40
DIAGNOSIS DESCRIPTION : 1 Trip Detection Diagnosis and 2 Trip Detection Diagnosis 40
DIAGNOSIS DESCRIPTION : DTC and DTC of 1st Trip 40
DIAGNOSIS DESCRIPTION : Malfunction Indicator Lamp (MIL) 40
DIAGNOSIS DESCRIPTION : Counter System 40
CONSULT Function 42

ECU DIAGNOSIS INFORMATION 48

TCM 48
Reference Value 48
Fail-safe 54
Protection Control 57
DTC Inspection Priority Chart 58
DTC Index 59

WIRING DIAGRAM 61

CVT CONTROL SYSTEM 61
Wiring diagram 61

CVT SHIFT LOCK SYSTEM 68
Wiring Diagram 68

BASIC INSPECTION 71

DIAGNOSIS AND REPAIR WORK FLOW 71
Flowchart of Trouble Diagnosis 71
Question sheet 72

ADDITIONAL SERVICE WHEN REPLACING TCM 74
Description 74
Work Procedure 74

ADDITIONAL SERVICE WHEN REPLACING TRANSAXLE ASSEMBLY 76
Description 76
Work Procedure 76

ADDITIONAL SERVICE WHEN REPLACING TCM AND TRANSAXLE ASSEMBLY 78
Description 78
Work Procedure 78

CALIBRATION OF G SENSOR 80
Description 80
Work Procedure 80

IDLE NEUTRAL CONTROL LEARNING 81
Description 81
Work Procedure 81

STALL TEST 82
Work Procedure 82

CVT POSITION 83
Inspection and Adjustment 83

HOW TO ERASE PERMANENT DTC 84
Description 84

DTC/CIRCUIT DIAGNOSIS 85

U0073 COMMUNICATION BUS A OFF 85
DTC Logic 85
Diagnosis Procedure 85

U0100 LOST COMMUNICATION (ECM A) 86
DTC Logic 86
Diagnosis Procedure 86

U0140 LOST COMMUNICATION (BCM) 87
DTC Logic 87
Diagnosis Procedure 87

U0141 LOST COMMUNICATION (BCM A) 88
DTC Logic 88
Diagnosis Procedure 88

U0155 LOST COMMUNICATION (IPC) 89
DTC Logic 89
Diagnosis Procedure 89

U0300 CAN COMMUNICATION DATA 90
DTC Logic 90
Diagnosis Procedure 90

U1000 CAN COMM CIRCUIT 91
Description 91
DTC Logic 91
Diagnosis Procedure 91

U1117 LOST COMMUNICATION (ABS) 92
DTC Logic 92
Diagnosis Procedure 92

cardiagn.com

P062F EEPROM **93**
Description 93
DTC Logic 93
Diagnosis Procedure 93

P0705 TRANSMISSION RANGE SENSOR A **94**
DTC Logic 94
Diagnosis Procedure 94
Component Inspection 98

P0706 TRANSMISSION RANGE SENSOR A **100**
DTC Logic 100
Diagnosis Procedure 100
Component Inspection 102

P0711 TRANSMISSION FLUID TEMPERATURE SENSOR A **103**
DTC Logic 103
Diagnosis Procedure 106

P0712 TRANSMISSION FLUID TEMPERATURE SENSOR A **108**
DTC Logic 108
Diagnosis Procedure 108
Component Inspection 108

P0713 TRANSMISSION FLUID TEMPERATURE SENSOR A **110**
DTC Logic 110
Diagnosis Procedure 110
Component Inspection 111

P0715 INPUT SPEED SENSOR A **112**
DTC Logic 112
Diagnosis Procedure 113

P0717 INPUT SPEED SENSOR A **115**
DTC Logic 115
Diagnosis Procedure 116

P0740 TORQUE CONVERTER **118**
DTC Logic 118
Diagnosis Procedure 119

P0743 TORQUE CONVERTER **120**
DTC Logic 120
Diagnosis Procedure 121

P0744 TORQUE CONVERTER **122**
DTC Logic 122
Diagnosis Procedure 123

P0746 PRESSURE CONTROL SOLENOID A **124**
DTC Logic 124
Diagnosis Procedure 125

P0776 PRESSURE CONTROL SOLENOID B **126**
DTC Logic 126
Diagnosis Procedure 127

P0778 PRESSURE CONTROL SOLENOID B **128**
DTC Logic 128
Diagnosis Procedure 128

P0779 PRESSURE CONTROL SOLENOID B **130**
DTC Logic 130
Diagnosis Procedure 130

P0841 TRANSMISSION FLUID PRESSURE SEN/SW A **132**
DTC Logic 132
Diagnosis Procedure 132

P0847 TRANSMISSION FLUID PRESSURE SEN/SW B **133**
DTC Logic 133
Diagnosis Procedure 133

P0848 TRANSMISSION FLUID PRESSURE SEN/SW B **135**
DTC Logic 135
Diagnosis Procedure 135

P084C TRANSMISSION FLUID PRESSURE SEN/SW H **137**
DTC Logic 137
Diagnosis Procedure 137

P084D TRANSMISSION FLUID PRESSURE SEN/SW H **139**
DTC Logic 139
Diagnosis Procedure 139

P0863 TCM COMMUNICATION **141**
DTC Logic 141
Diagnosis Procedure 141

P0890 TCM **142**
DTC Logic 142
Diagnosis Procedure 142

P0962 PRESSURE CONTROL SOLENOID A **143**
DTC Logic 143
Diagnosis Procedure 143

P0963 PRESSURE CONTROL SOLENOID A **145**
DTC Logic 145
Diagnosis Procedure 145

P0965 PRESSURE CONTROL SOLENOID B **147**
DTC Logic 147
Diagnosis Procedure 148

P0966 PRESSURE CONTROL SOLENOID B **149**
DTC Logic 149
Diagnosis Procedure 149

P0967 PRESSURE CONTROL SOLENOID B **151**
DTC Logic 151
Diagnosis Procedure 151

P1586 G SENSOR **153**
DTC Logic 153
Diagnosis Procedure 153

cardiagn.com

P1588 G SENSOR **156**
DTC Logic 156
Diagnosis Procedure 157

P2765 INPUT SPEED SENSOR B **158**
DTC Logic 158
Diagnosis Procedure 159

P2813 SELECT SOLENOID **161**
DTC Logic 161
Diagnosis Procedure 162

P2814 SELECT SOLENOID **163**
DTC Logic 163
Diagnosis Procedure 163

P2815 SELECT SOLENOID **165**
DTC Logic 165
Diagnosis Procedure 165

MAIN POWER SUPPLY AND GROUND CIRCUIT **167**
Diagnosis Procedure 167

SHIFT POSITION INDICATOR CIRCUIT **169**
Component Function Check 169
Diagnosis Procedure 169

OVERDRIVE CONTROL SWITCH **170**
Component Function Check 170
Diagnosis Procedure 170
Component Inspection (Overdrive Control Switch) ..171

OD OFF INDICATOR LAMP **172**
Component Function Check 172
Diagnosis Procedure 172

SHIFT LOCK SYSTEM **173**
Component Function Check 173
Diagnosis Procedure 173
Component Inspection (Stop Lamp Switch) 175
Component Inspection (Shift Lock Solenoid) 175

SYMPTOM DIAGNOSIS **176**

CVT CONTROL SYSTEM **176**
Symptom Table 176

PERIODIC MAINTENANCE **180**

CVT FLUID **180**
Inspection 180
Replacement 180
Adjustment 182

CVT FLUID COOLER SYSTEM **184**
Cleaning 184

REMOVAL AND INSTALLATION **187**

CVT SHIFT SELECTOR **187**
Exploded View 187
Removal and Installation 187
Disassembly and Assembly 188
Inspection and Adjustment 189

CONTROL CABLE **190**
Exploded View 190
Removal and Installation 190
Inspection and Adjustment 191

TCM **192**
Exploded View 192
Removal and Installation 192
Adjustment 192

CONTROL VALVE **193**
Exploded View 193
Removal and Installation 194
Inspection and Adjustment 198

G SENSOR **199**
Exploded View 199
Removal and Installation 199
Adjustment 199

INPUT SPEED SENSOR **200**
Exploded View 200
Removal and Installation 200
Inspection and Adjustment 200

PRIMARY SPEED SENSOR **202**
Exploded View 202
Removal and Installation 202
Inspection and Adjustment 202

OUTPUT SPEED SENSOR **203**
Exploded View 203
Removal and Installation 203
Inspection and Adjustment 203

AIR BREATHER HOSE **204**
Exploded View 204
Removal and Installation 204

DIFFERENTIAL SIDE OIL SEAL **206**
Exploded View 206
Removal and Installation 206
Inspection and Adjustment 207

CVT OIL WARMER SYSTEM **208**

WATER HOSE **208**
WATER HOSE : Exploded View 208
WATER HOSE : Removal and Installation 208
WATER HOSE : Inspection 210

CVT FLUID COOLER HOSE **210**
CVT FLUID COOLER HOSE : Exploded View 210
CVT FLUID COOLER HOSE : Removal and Installation 211
CVT FLUID COOLER HOSE : Inspection 212

cardiagn.com

CVT OIL WARMER **212**
CVT OIL WARMER : Exploded View 212
CVT OIL WARMER : Removal and Installation ... 212
CVT OIL WARMER : Inspection 213

PLUG **214**
Description 214
Exploded View 214
Removal and Installation 214
Inspection and Adjustment 214

UNIT REMOVAL AND INSTALLATION ... **215**

TRANSAXLE ASSEMBLY **215**
Exploded View 215
Removal and Installation 215
Inspection and Adjustment 217

UNIT DISASSEMBLY AND ASSEMBLY . **219**

TORQUE CONVERTER AND CONVERTER HOUSING OIL SEAL **219**
Exploded View 219
Disassembly 219
Assembly 219
Inspection 220

SERVICE DATA AND SPECIFICATIONS (SDS) **222**

SERVICE DATA AND SPECIFICATIONS (SDS) **222**
General Specification 222
Shift Characteristics 222
Stall Speed 222
Torque Converter 222
Heater Thermostat 222

cardiagn.com

PRECAUTION

PRECAUTIONS

Precaution for Supplemental Restraint System (SRS) "AIR BAG" and "SEAT BELT PRE-TENSIONER"

INFOID:0000000012404382

The Supplemental Restraint System such as “AIR BAG” and “SEAT BELT PRE-TENSIONER”, used along with a front seat belt, helps to reduce the risk or severity of injury to the driver and front passenger for certain types of collision. This system includes seat belt switch inputs and dual stage front air bag modules. The SRS system uses the seat belt switches to determine the front air bag deployment, and may only deploy one front air bag, depending on the severity of a collision and whether the front occupants are belted or unbelted.
Information necessary to service the system safely is included in the “SRS AIR BAG” and “SEAT BELT” of this Service Manual.

WARNING:
Always observe the following items for preventing accidental activation.
- **To avoid rendering the SRS inoperative, which could increase the risk of personal injury or death in the event of a collision that would result in air bag inflation, all maintenance must be performed by an authorized NISSAN/INFINITI dealer.**
- **Improper maintenance, including incorrect removal and installation of the SRS, can lead to personal injury caused by unintentional activation of the system. For removal of Spiral Cable and Air Bag Module, see “SRS AIR BAG”.**
- **Never use electrical test equipment on any circuit related to the SRS unless instructed to in this Service Manual. SRS wiring harnesses can be identified by yellow and/or orange harnesses or harness connectors.**

PRECAUTIONS WHEN USING POWER TOOLS (AIR OR ELECTRIC) AND HAMMERS

WARNING:
Always observe the following items for preventing accidental activation.
- **When working near the Air Bag Diagnosis Sensor Unit or other Air Bag System sensors with the ignition ON or engine running, never use air or electric power tools or strike near the sensor(s) with a hammer. Heavy vibration could activate the sensor(s) and deploy the air bag(s), possibly causing serious injury.**
- **When using air or electric power tools or hammers, always switch the ignition OFF, disconnect the battery, and wait at least 3 minutes before performing any service.**

Precaution for Procedure without Cowl Top Cover

INFOID:0000000012404383

When performing the procedure after removing cowl top cover, cover the lower end of windshield with urethane, etc to prevent damage to windshield.

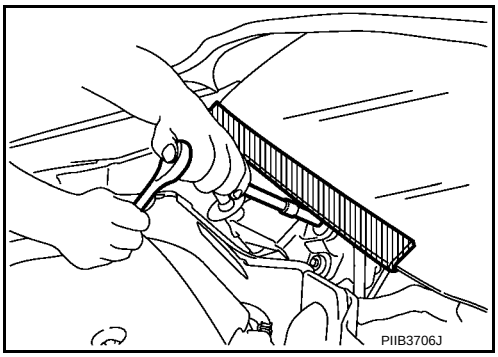

Precautions for Removing Battery Terminal

INFOID:0000000012922810

When disconnecting the battery terminal, pay attention to the following.
- Always use a 12V battery as power source.
- Never disconnect battery terminal while engine is running.

cardiagn.com

- When removing the 12V battery terminal, turn OFF the ignition switch and wait at least 30 seconds.
- For vehicles with the engine listed below, remove the battery terminal after a lapse of the specified time:

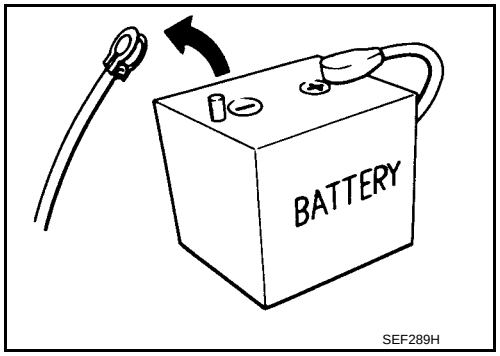

D4D engine	: 20 minutes	YS23DDT	: 4 minutes
HRA2DDT	: 12 minutes	YS23DDTT	: 4 minutes
K9K engine	: 4 minutes	ZD30DDTi	: 60 seconds
M9R engine	: 4 minutes	ZD30DDTT	: 60 seconds
R9M engine	: 4 minutes		
V9X engine	: 4 minutes		
YD25DDTi	: 2 minutes		

NOTE:
ECU may be active for several tens of seconds after the ignition switch is turned OFF. If the battery terminal is removed before ECU stops, then a DTC detection error or ECU data corruption may occur.

- After high-load driving, if the vehicle is equipped with the V9X engine, turn the ignition switch OFF and wait for at least 15 minutes to remove the battery terminal.

NOTE:
- Turbocharger cooling pump may operate in a few minutes after the ignition switch is turned OFF.
- Example of high-load driving
  - Driving for 30 minutes or more at 140 km/h (86 MPH) or more.
  - Driving for 30 minutes or more on a steep slope.

- For vehicles with the 2-batteries, be sure to connect the main battery and the sub battery before turning ON the ignition switch.

NOTE:
If the ignition switch is turned ON with any one of the terminals of main battery and sub battery disconnected, then DTC may be detected.

- After installing the 12V battery, always check "Self Diagnosis Result" of all ECUs and erase DTC.

NOTE:
The removal of 12V battery may cause a DTC detection error.

Precaution for On Board Diagnosis (OBD) System of CVT and Engine

INFOID:0000000012404385

The ECM has an on board diagnostic system. It will illuminate the malfunction indicator lamp (MIL) to warn the driver of a malfunction causing emission deterioration.

CAUTION:
- **Always to turn the ignition switch OFF and disconnect the negative battery cable before any repair or inspection work. The open/short circuit of related switches, sensors, solenoid valves, etc. will cause the MIL to illuminate.**
- **Always to connect and lock the connectors securely after work. A loose (unlocked) connector will cause the MIL to illuminate due to the open circuit. (Be sure the connector is free from water, grease, dirt, bent terminals, etc.)**
- **Always route and secure the harnesses properly after work. The interference of the harness with a bracket, etc. may cause the MIL to illuminate due to the short circuit.**
- **Always to connect rubber tubes properly after work. A misconnected or disconnected rubber tube may cause the MIL to illuminate due to the malfunction of the EVAP system or fuel injection system, etc.**
- **Always to erase the unnecessary malfunction information (repairs completed) from the TCM and ECM before returning the vehicle to the customer.**

Precaution for TCM and Transaxle Assembly Replacement

INFOID:0000000012404386

- When replaced the TCM, refer to TM-74, "Description".
- When replaced the transaxle assembly, refer to TM-76, "Description".

Removal and Installation Procedure for CVT Unit Connector

INFOID:0000000012404387

REMOVAL

cardiagn.com

Rotate bayonet ring counterclockwise. Pull out CVT unit harness connector upward and remove it.

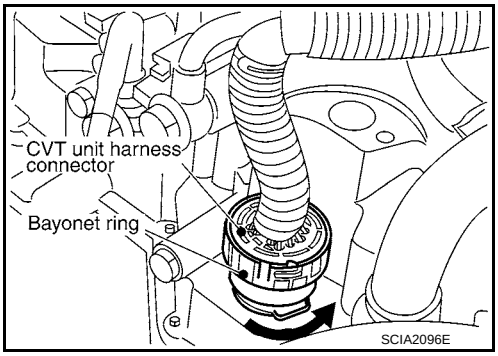

INSTALLATION

1. Align Δ marking on CVT unit harness connector terminal body with □ marking on bayonet ring. Insert CVT unit harness connector. Then rotate bayonet ring clockwise.

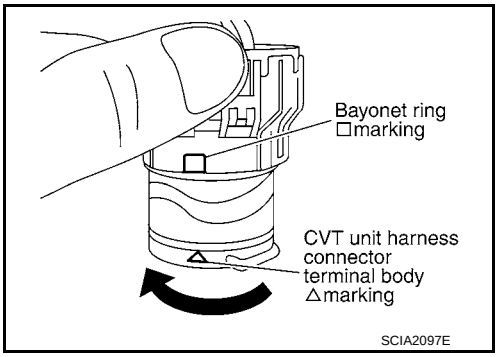

2. Rotate bayonet ring clockwise until Δ marking on CVT unit harness connector terminal body is aligned with the slit on bayonet ring as shown in the figure (correctly fitting condition). Install CVT unit harness connector to CVT unit harness connector terminal body.

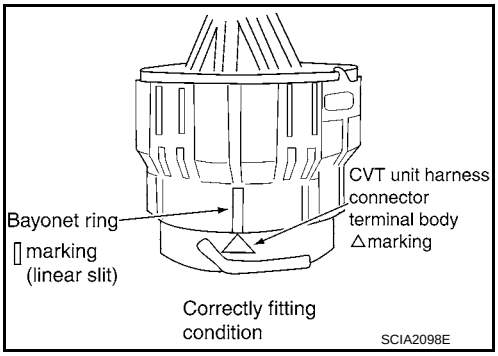

CAUTION:

- **Securely align Δ marking on CVT unit harness connector terminal body with bayonet ring slit. Then, be careful not to make a half fit condition as shown in the figure.**
- **Never mistake the slit of bayonet ring for other dent portion.**

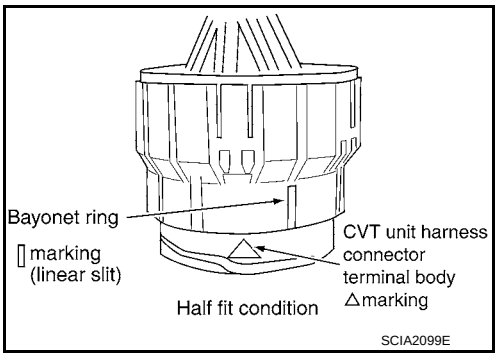

cardiagn.com

Precaution

INFOID:0000000012404388

- **Turn ignition switch OFF and disconnect negative battery cable before connecting or disconnecting the TCM harness connector. Because battery voltage is applied to TCM even if ignition switch is turned OFF.**

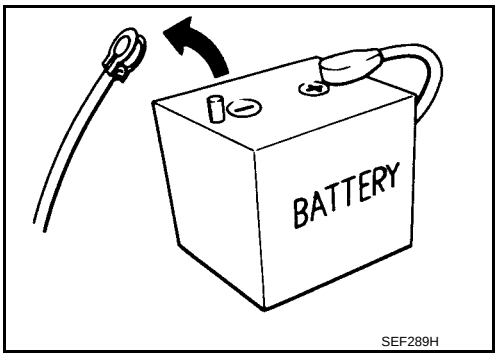

- **When connecting or disconnecting pin connectors into or from TCM, do not damage pin terminals (bend or break).**
  Check that there are not any bends or breaks on TCM pin terminal, when connecting pin connectors.

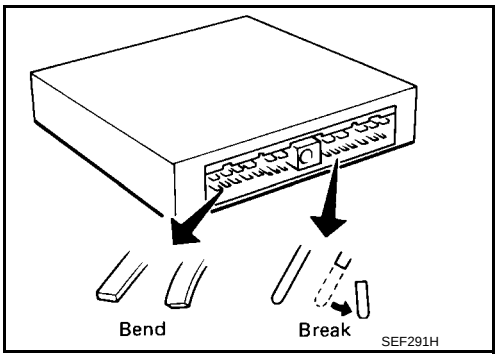

- **Perform TCM input/output signal inspection and check whether TCM functions normally or not before replacing TCM. TM-48, "Reference Value".**

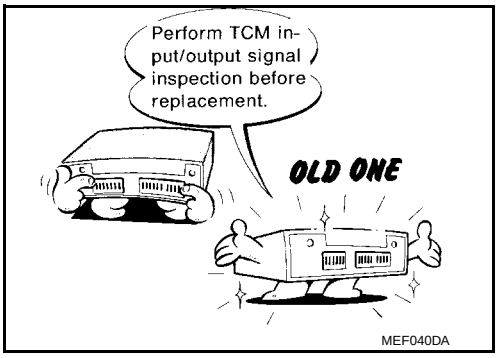

- **Perform "DTC Confirmation Procedure" after performing each TROUBLE DIAGNOSIS.**
  If the repair is completed the DTC should not be displayed in the "DTC Confirmation Procedure".
- Always use the specified brand of CVT fluid. Refer to MA-10, "Fluids and Lubricants".
- Use lint-free paper, not cloth rags, during work.
- Dispose of the waste oil using the methods prescribed by law, ordinance, etc. after replacing the CVT fluid.

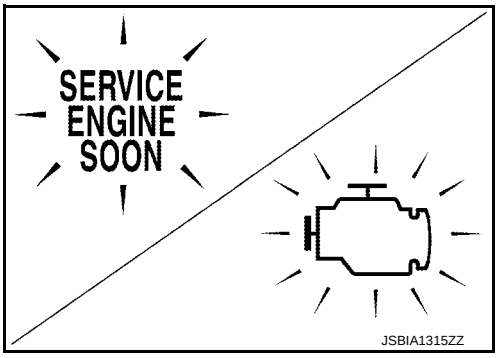

Service Notice or Precaution

INFOID:0000000012404389

OBD-II SELF-DIAGNOSIS

- CVT self-diagnosis is performed by the TCM in combination with the ECM. The results can be read through the blinking pattern of the Malfunction Indicator Lamp (MIL). Refer to the table on TM-42, "CONSULT Function" for the indicator used to display each self diagnostic result.
- The self diagnostic results indicated by the MIL are automatically stored in both the ECM and TCM memories.

cardiagn.com

Always perform the procedure on TM-39, "Diagnosis Description" to complete the repair and avoid unnecessary blinking of the MIL.

For details of OBD-II, refer to EC-62, "Diagnosis Description".

- **Certain systems and components, especially those related to OBD, may use the new style slide-locking type harness connector. For description and how to disconnect, refer to PG-6, "Harness Connector".**

cardiagn.com

PREPARATION

PREPARATION

Special Service Tools

INFOID:0000000012404390

The actual shapes of TechMate tools may differ from those of special service tools illustrated here.

Tool number (TechMate No.) Tool name	Description
— (OTC3492) Oil pressure gauge set SCIA7531E	Measuring line pressure
ST33400001 (J-26082) Drift a: 60 mm (2.36 in) dia. b: 47 mm (1.85 in) dia. 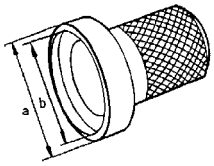 ZZA0814D	Installing differential side oil seal
KV40100621 (J-25405) Drift a: 76 mm (2.99 in) dia. b: 69 mm (2.72 in) dia. 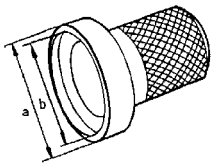 ZZA0814D	Installing side oil seal (transfer joint)

Commercial Service Tools

INFOID:0000000012404391

Tool number Tool name	Description
Power tool 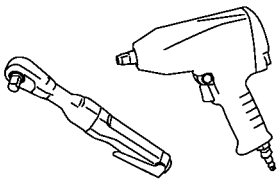 PBIC0190E	Loosening nuts and bolts
31197CA000 Drive plate location guide a: 14 mm (0.55 in) dia. 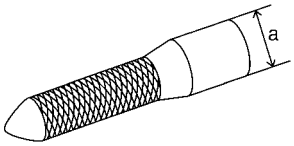 SCIA2013E	Installing transaxle assembly

cardiagn.com

SYSTEM DESCRIPTION

COMPONENT PARTS

CVT CONTROL SYSTEM

CVT CONTROL SYSTEM : Component Parts Location

INFOID:0000000012404392

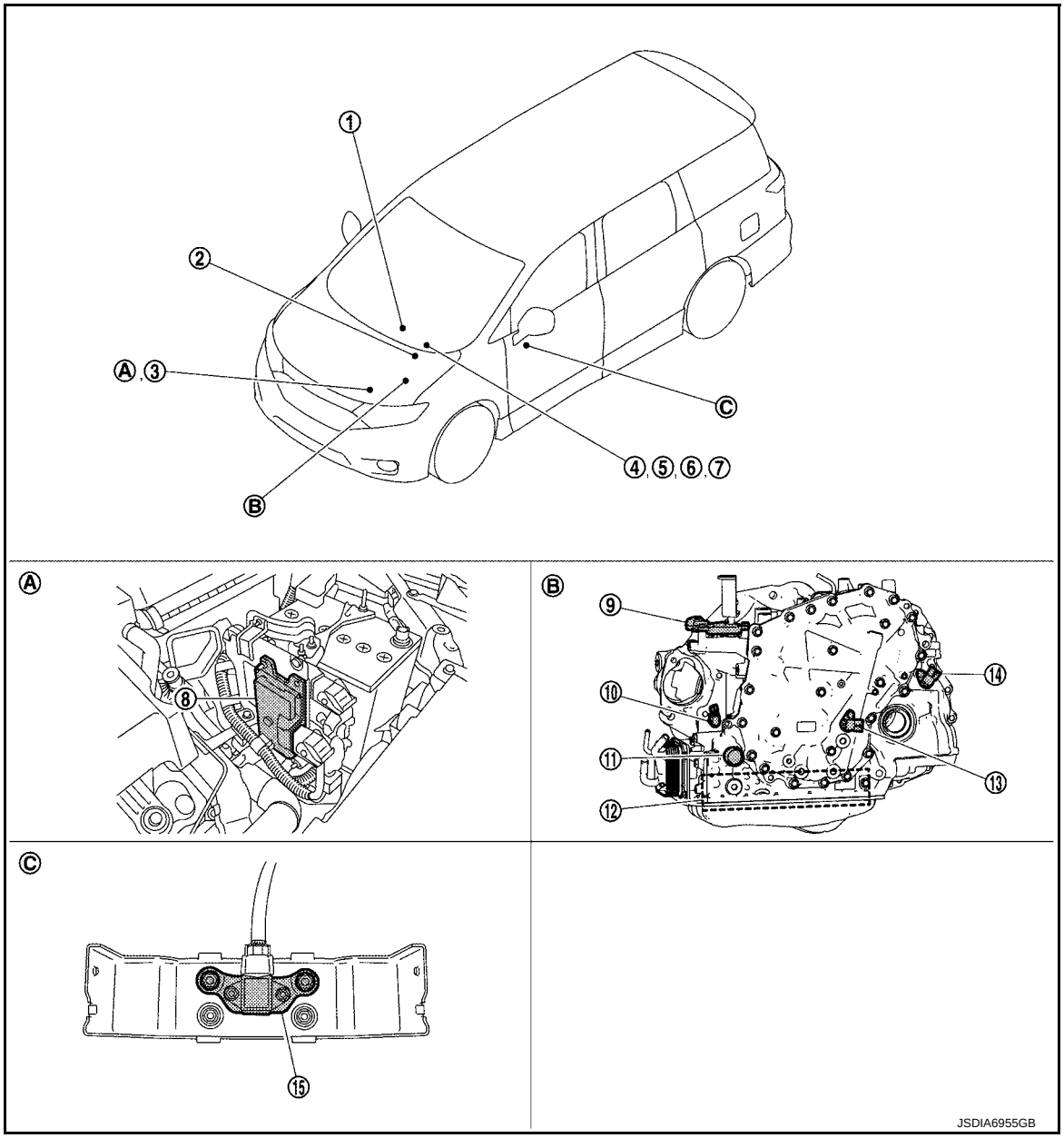

No.	Component	Function
①	Overdrive control switch	TM-17, "CVT CONTROL SYSTEM : Overdrive Control Switch"
②	BCM	Refer to BCS-5, "BODY CONTROL SYSTEM : Component Parts Location" for detailed installation location.

cardiagn.com

No.	Component		Function
③	ECM		• For purposes including improving the feeling when shifting speeds and preventing drops in engine speed, control signals are exchanged between the ECM and TCM, and real-time cooperative control is performed according to the vehicle driving conditions. (Engine and CVT integrated control) - Engine and CVT integrated control signal **NOTE:** General term for the communication (torque-down permission, torque-down request, etc.) exchanged between the ECM and TCM. • The TCM receives the following signal via CAN communications from the ECM. - Engine speed signal - Accelerator pedal position signal - Closed throttle position signal • The TCM transmits the following signal via CAN communications to the ECM. - Malfunctioning indicator lamp signal Refer to EC-17, "ENGINE CONTROL SYSTEM : Component Parts Location" for detailed installation location.
④	Combination meter		The TCM receives the following signal via CAN communications from the combination meter for judging the driving request from the driver. • Overdrive control switch signal • Vehicle speed signal The TCM transmits the following signal via CAN communications to the combination meter. • O/D OFF indicator signal • Shift position indicator signal Refer to MWI-7, "METER SYSTEM : Component Parts Location" for detailed installation location.
⑤	Shift position indicator		TM-18, "CVT CONTROL SYSTEM : Shift Position Indicator"
⑥	O/D OFF indicator lamp		TM-17, "CVT CONTROL SYSTEM : O/D OFF Indicator Lamp"
⑦	Malfunction indicator lamp (MIL)		TM-40, "DIAGNOSIS DESCRIPTION : Malfunction Indicator Lamp (MIL)"
⑧	TCM		TM-14, "CVT CONTROL SYSTEM : TCM"
⑨	Transmission range switch		TM-14, "CVT CONTROL SYSTEM : Transmission Range Switch"
⑩	Input speed sensor		TM-15, "CVT CONTROL SYSTEM : Input Speed Sensor"
⑪	CVT unit connector		—
⑫	Control valve	CVT fluid temperature sensor*	TM-15, "CVT CONTROL SYSTEM : CVT Fluid Temperature Sensor"
		Primary pressure sensor*	TM-15, "CVT CONTROL SYSTEM : Primary Pressure Sensor"
		Secondary pressure sensor*	TM-16, "CVT CONTROL SYSTEM : Secondary Pressure Sensor"
		Primary pressure solenoid valve*	TM-16, "CVT CONTROL SYSTEM : Primary Pressure Solenoid Valve"
		Secondary pressure solenoid valve*	TM-16, "CVT CONTROL SYSTEM : Secondary Pressure Solenoid Valve"
		Select solenoid valve*	TM-17, "CVT CONTROL SYSTEM : Select Solenoid Valve"
		Torque converter clutch solenoid valve*	TM-17, "CVT CONTROL SYSTEM : Torque Converter Clutch Solenoid Valve"
		Line pressure solenoid valve*	TM-17, "CVT CONTROL SYSTEM : Line Pressure Solenoid Valve"
⑬	Primary speed sensor		TM-14, "CVT CONTROL SYSTEM : Primary Speed Sensor"
⑭	Output speed sensor		TM-14, "CVT CONTROL SYSTEM : Output Speed Sensor"
⑮	G sensor		TM-18, "CVT CONTROL SYSTEM : G Sensor"

*: These components are included in control valve assembly.

cardiagn.com

CVT CONTROL SYSTEM : TCM

INFOID:0000000012404393

- The vehicle driving status is judged based on the signals from the sensors, switches, and other control units, and the optimal transaxle control is performed.
- For TCM control items, refer to TM-28, "CVT CONTROL SYSTEM : System Description".

CVT CONTROL SYSTEM : Transmission Range Switch

INFOID:0000000012404394

- The transmission range switch is installed to upper part of transaxle case.
- The transmission range switch detects the selector lever position.

CVT CONTROL SYSTEM : Primary Speed Sensor

INFOID:0000000012404395

- The primary speed sensor is installed to side cover of transaxle.
- The primary speed sensor detects primary pulley speed.
- The primary speed sensor generates an ON-OFF pulse signal according to the rotating body speed. TCM judges the rotating body speed from the pulse signal.

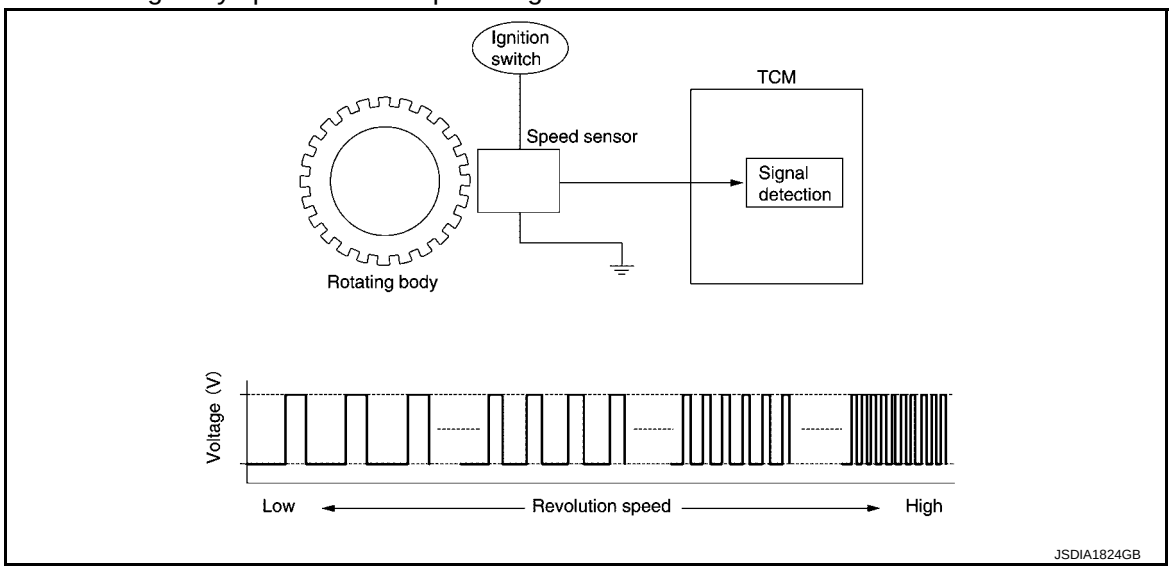

CVT CONTROL SYSTEM : Output Speed Sensor

INFOID:0000000012404396

- The output speed sensor is installed to back side of transaxle.
- The output speed sensor detects final gear speed.
- The output speed sensor generates the ON-OFF pulse (short waveform) in proportion to the rotating body speed which is “The higher the rotating body speed is, the faster the change cycle is”. The TCM judges the rotating speed from the changing cycle of this pulse signal.

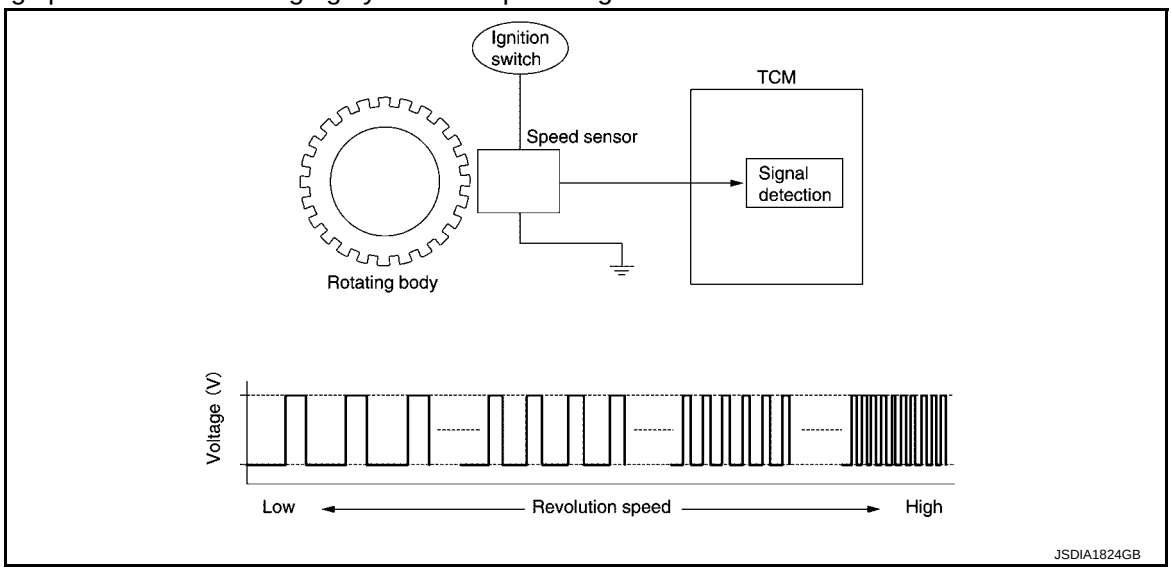

cardiagn.com

CVT CONTROL SYSTEM : Input Speed Sensor

INFOID:0000000012404397

- The input speed sensor is installed to the front side of transaxle case.
- The input speed sensor detects input shaft speed.
- The input speed sensor generates an ON-OFF pulse signal according to the rotating body speed. TCM judges the rotating body speed from the pulse signal.

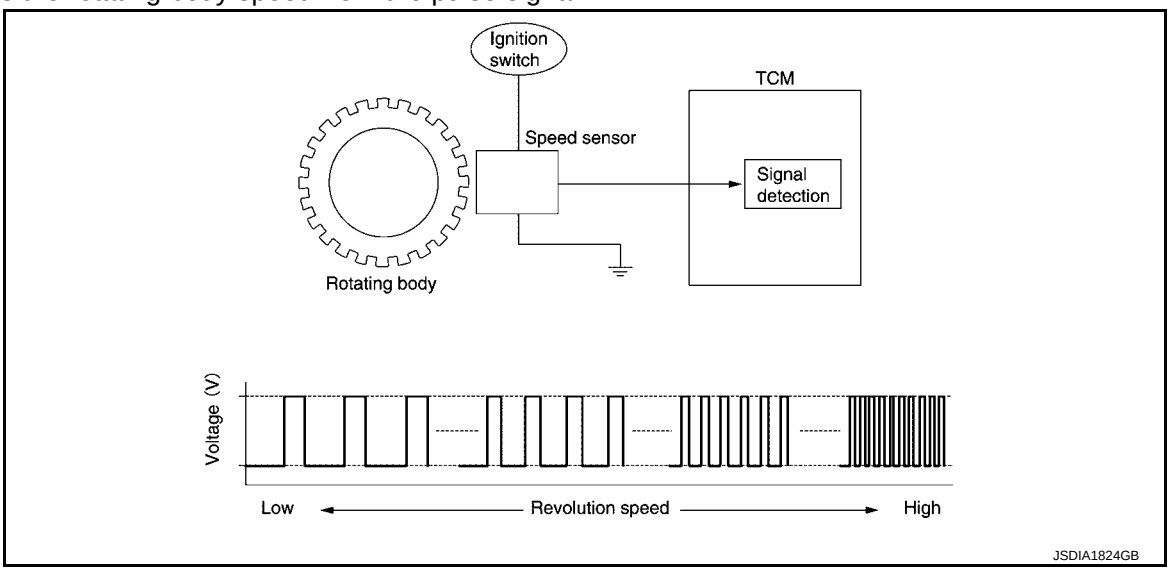

CVT CONTROL SYSTEM : CVT Fluid Temperature Sensor

INFOID:0000000012404398

- The CVT fluid temperature sensor is installed to control valve.
- The CVT fluid temperature sensor detects CVT fluid temperature in oil pan.
- The fluid temperature sensor uses a thermistor, and changes the signal voltage by converting changes in the CVT fluid temperature to a resistance value. TCM evaluates the CVT fluid temperature from the signal voltage value.

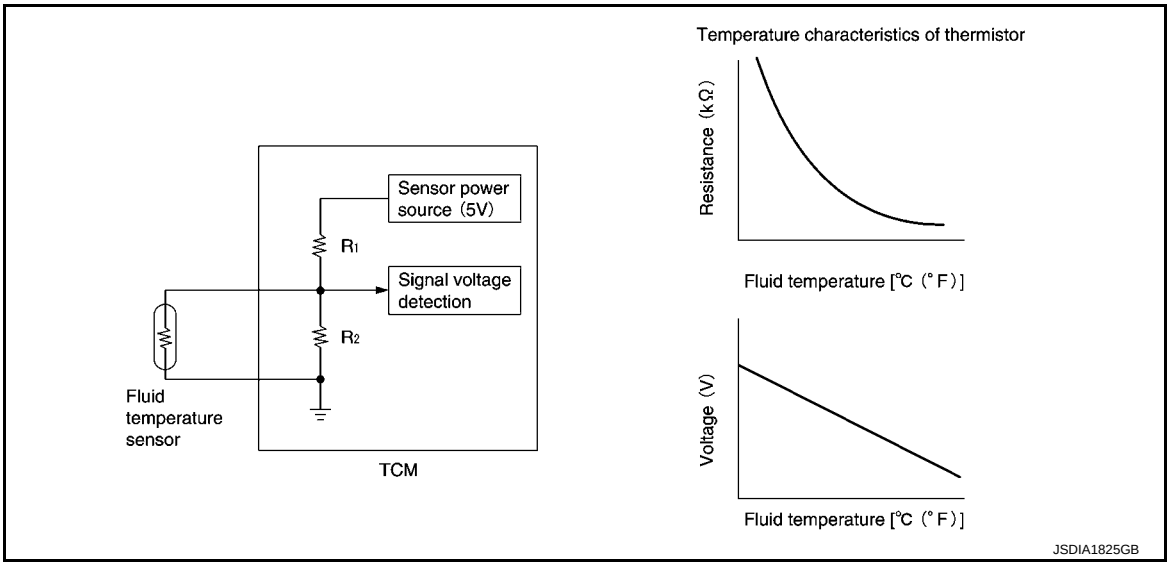

CVT CONTROL SYSTEM : Primary Pressure Sensor

INFOID:0000000012404399

- The primary pressure sensor is installed to control valve.
- The primary pressure sensor detects the pressure applied to the primary pulley.

cardiagn.com

- When pressure is applied to the ceramic device in the primary pressure sensor, the ceramic device is deformed, resulting in voltage change. TCM evaluates the primary pressure from its voltage change. Voltage is increased along with pressure increase.

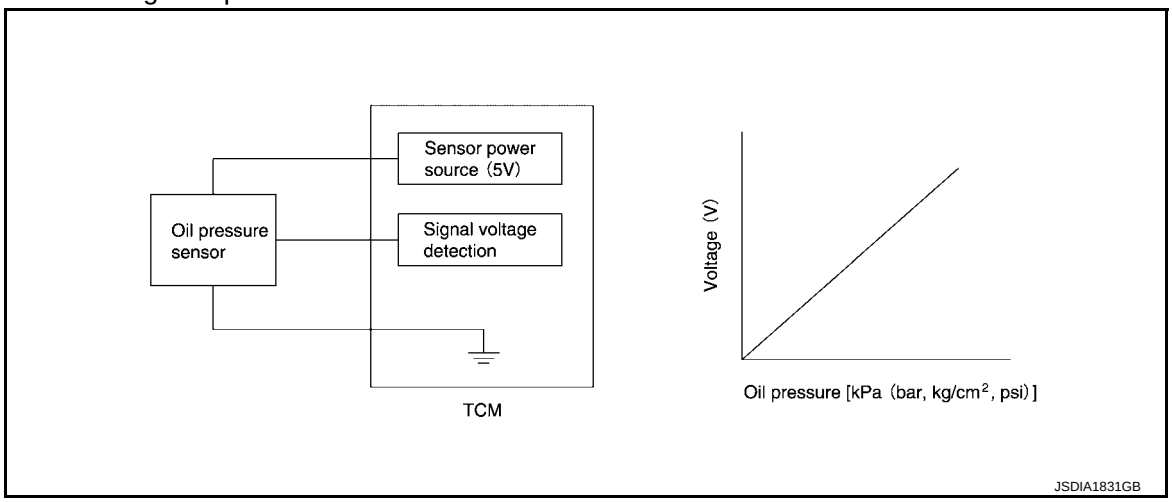

CVT CONTROL SYSTEM : Secondary Pressure Sensor

INFOID:0000000012404400

- The secondary pressure sensor is installed to control valve.
- The secondary pressure sensor detects the pressure applied to the secondary pulley.
- When pressure is applied to the metal diaphragm in the secondary pressure sensor, the metal diaphragm is deformed, resulting in voltage change. TCM evaluates the secondary pressure from its voltage change. Voltage is increased along with pressure increase.

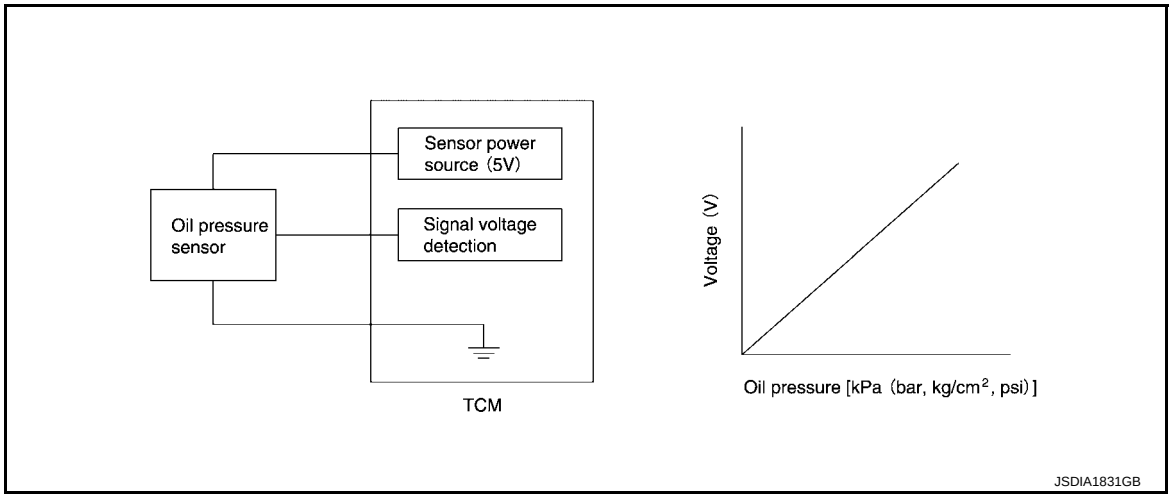

CVT CONTROL SYSTEM : Primary Pressure Solenoid Valve

INFOID:0000000012404401

- The primary pressure solenoid valve is installed to control valve.
- The primary pressure solenoid valve controls the primary reducing valve. For information about the primary reducing valve, refer to TM-24, "TRANSAXLE : Component Description".
- The primary pressure solenoid valve uses the linear solenoid valve [N/H (normal high) type].

NOTE:
- The principle of the linear solenoid valve utilizes the fact that the force pressing on the valve spool installed inside the coil increases nearly in proportion to the current. This allows it to produce a fluid pressure that is proportional to this pressing force.
- The N/H (normal high) produces hydraulic control when the coil is not energized.

CVT CONTROL SYSTEM : Secondary Pressure Solenoid Valve

INFOID:0000000012404402

- The secondary pressure solenoid valve is installed to control valve.
- The secondary pressure solenoid valve controls the secondary reducing valve. For information about the secondary reducing valve, refer to TM-24, "TRANSAXLE : Component Description".
- The secondary pressure solenoid valve uses the linear solenoid valve [N/H (normal high) type].

cardiagn.com

NOTE:
- The principle of the linear solenoid valve utilizes the fact that the force pressing on the valve spool installed inside the coil increases nearly in proportion to the current. This allows it to produce a fluid pressure that is proportional to this pressing force.
- The N/H (normal high) produces hydraulic control when the coil is not energized.

CVT CONTROL SYSTEM : Select Solenoid Valve

INFOID:0000000012404403

- The select solenoid valve is installed to control valve.
- The select solenoid valve adjusts the tightening pressure of the forward clutch and reverse brake. For information about the forward clutch and reverse brake, refer to TM-24, "TRANSAXLE : Component Description".
- The select solenoid valve uses the linear solenoid valve [N/H (normal high) type].

NOTE:
- The principle of the linear solenoid valve utilizes the fact that the force pressing on the valve spool installed inside the coil increases nearly in proportion to the current. This allows it to produce a fluid pressure that is proportional to this pressing force.
- The N/H (normal high) type produces hydraulic control when the coil is not energized.

CVT CONTROL SYSTEM : Torque Converter Clutch Solenoid Valve

INFOID:0000000012404404

- The torque converter clutch solenoid valve is installed to control valve.
- The torque converter clutch solenoid valve controls the torque converter clutch control valve. For information about the torque converter clutch control valve, refer to TM-24, "TRANSAXLE : Component Description".
- The torque converter clutch solenoid valve utilizes a linear solenoid valve [N/L (normal low) type].

NOTE:
- The principle of the linear solenoid valve utilizes the fact that the force pressing on the valve spool installed inside the coil increases nearly in proportion to the current. This allows it to produce a fluid pressure that is proportional to this pressing force.
- The N/L (normal low) type does not produce hydraulic control when the coil is not energized.

CVT CONTROL SYSTEM : Line Pressure Solenoid Valve

INFOID:0000000012404405

- The line pressure solenoid valve is installed to control valve.
- The line pressure solenoid valve controls the pressure regulator valve. For information about the pressure regulator valve, refer to TM-24, "TRANSAXLE : Component Description".
- The line pressure solenoid valve uses the linear solenoid valve [N/H (normal high) type].

NOTE:
- The principle of the linear solenoid valve utilizes the fact that the force pressing on the valve spool installed inside the coil increases nearly in proportion to the current. This allows it to produce a fluid pressure that is proportional to this pressing force.
- The N/H (normal high) produces hydraulic control when the coil is not energized.

CVT CONTROL SYSTEM : Overdrive Control Switch

INFOID:0000000012404406

- The overdrive control switch is installed to the selector lever knob.
- If the overdrive control switch is pressed when the O/D OFF indicator lamp on the combination meter is not lit, the status changes to overdrive OFF and the O/D OFF indicator lamp illuminates.
- If the overdrive control switch is pressed when the O/D OFF indicator lamp on the combination meter is lit, the overdrive OFF status is canceled and the O/D OFF indicator lamp turns off.

CVT CONTROL SYSTEM : O/D OFF Indicator Lamp

INFOID:0000000012404407

- O/D OFF indicator lamp is positioned on the combination meter.
- The O/D OFF indicator lamp illuminates when the overdrive function is deactivated (O/D OFF).
- For checking the bulb, this lamp turns on for a certain period of time when the ignition switch turns ON, andthen turns off.

Condition (status)	O/D OFF indicator lamp
Ignition switch OFF.	OFF
Ignition switch ON.	ON (Approx. 2 seconds)

cardiagn.com

Condition (status)	O/D OFF indicator lamp
Overdrive control switch is pressed when the selector lever is in the D position and the O/D OFF indicator lamp is OFF (when system is normal).	ON
Overdrive control switch is pressed when the selector lever is in the D position and the O/D OFF indicator lamp is ON.	OFF
Selector lever is shifted from the D position to another position-when the O/D OFF indicator lamp is ON.	OFF

CVT CONTROL SYSTEM : Shift Position Indicator

INFOID:0000000012404408

TCM transmits shift position signal to combination meter via CAN communication. The actual shift position is displayed on combination meter according to the signal.

CVT CONTROL SYSTEM : G Sensor

INFOID:0000000012404409

- G sensor detects front/rear G and inclination applied to the vehicle.
- G sensor converts front/rear G and inclination applied to the vehicle to voltage signal. TCM evaluates front/rear G and inclination angle of the vehicle from the voltage signal.

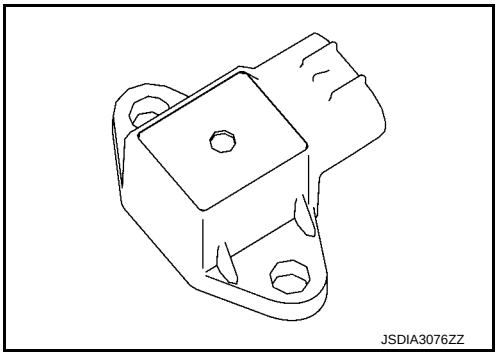

SHIFT LOCK SYSTEM

cardiagn.com

SHIFT LOCK SYSTEM : Component Parts Location

INFOID:0000000012404410

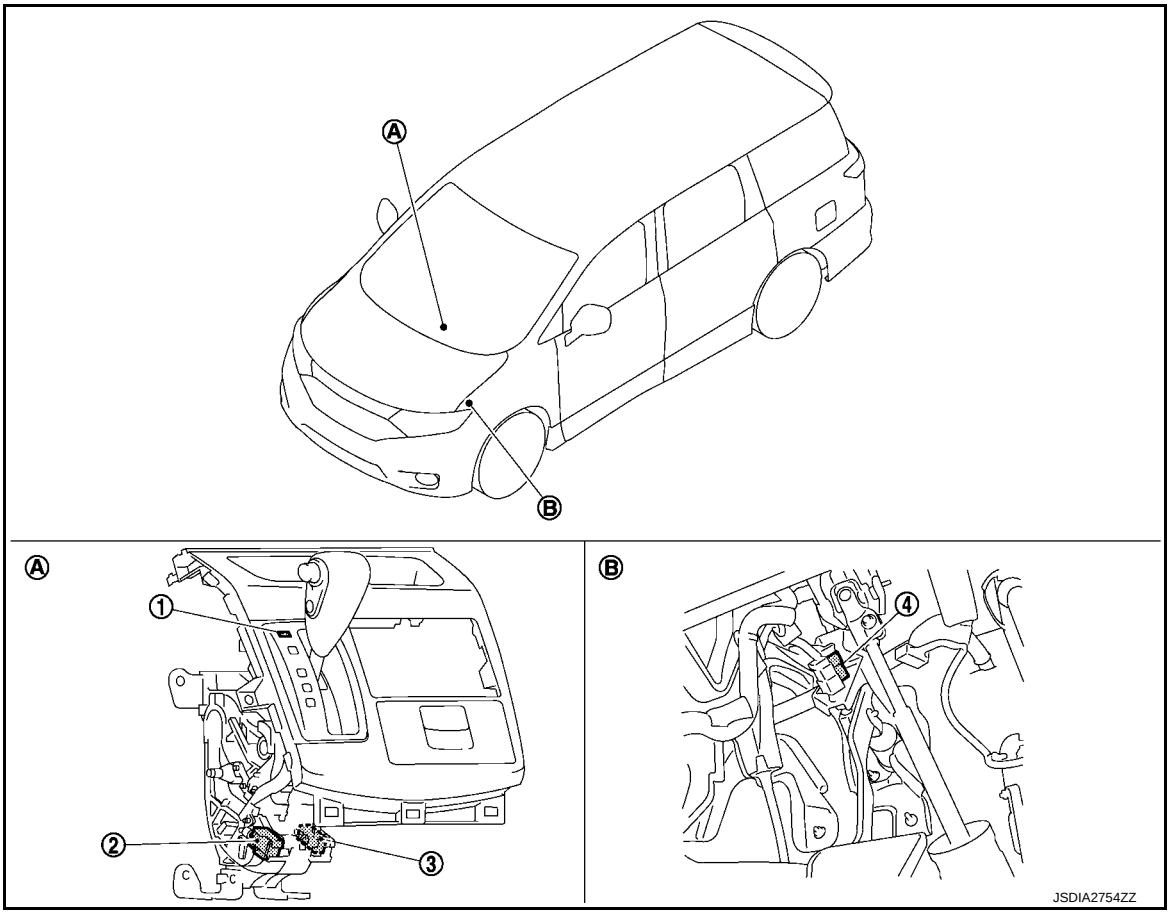

No.	Component	Function
①	Stop lamp switch	• The stop lamp switch turns ON when the brake pedal is depressed. • When the stop lamp switch turns ON, the shift lock solenoid is energized.
②	Shift lock solenoid	It operates according to the signal from the stop lamp switch and moves the lock lever.
③	Park position switch	It detects that the selector lever is in “P” position.
④	Shift lock release button	Forcibly releases the shift lock when pressed.

cardiagn.com

STRUCTURE AND OPERATION

TRANSAXLE

TRANSAXLE : Cross-Sectional View

INFOID:0000000012404411

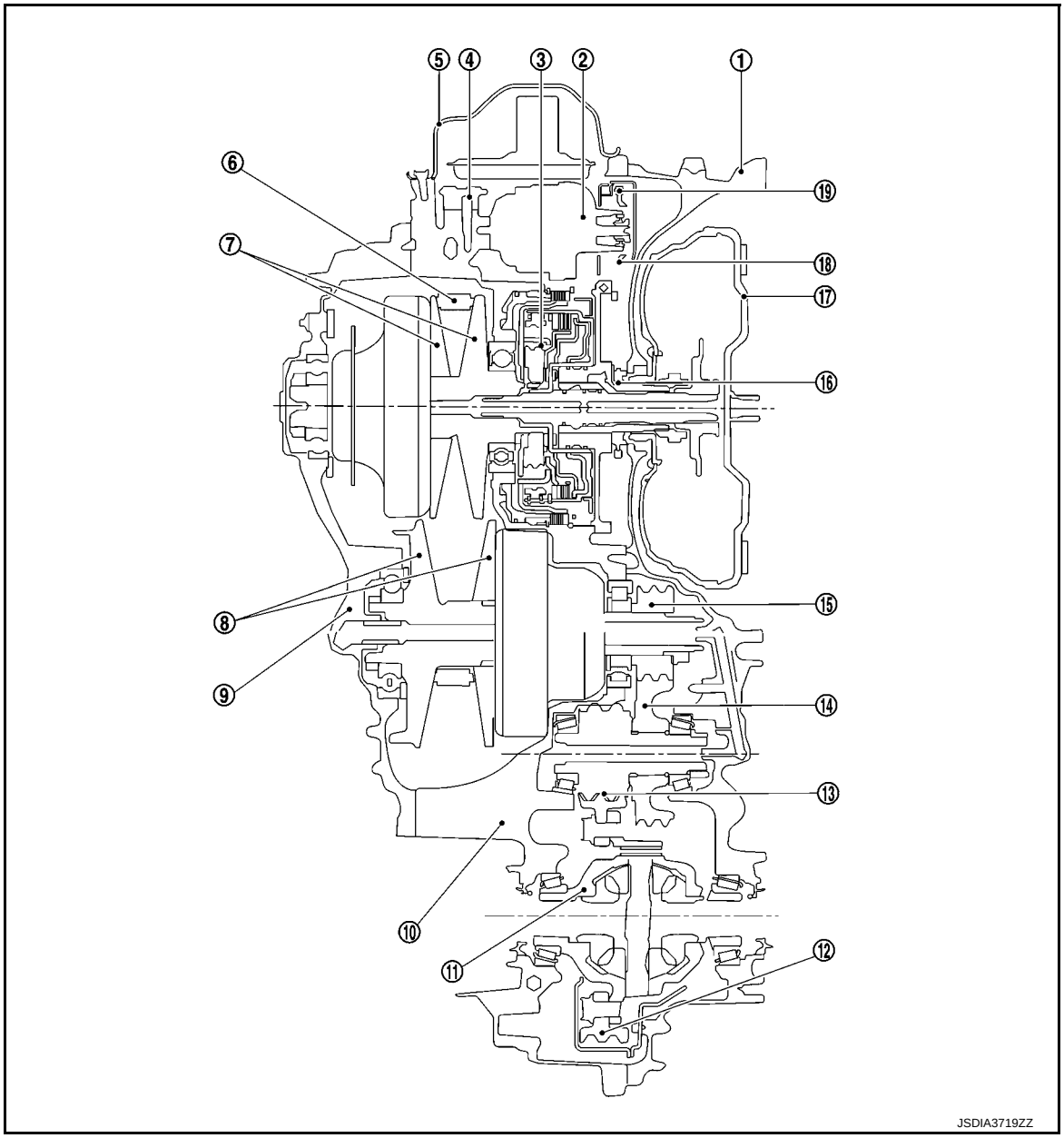

① Converter housing	② Oil pump	③ Planetary gear
④ Control valve	⑤ Oil pan	⑥ Chain belt
⑦ Primary pulley	⑧ Secondary pulley	⑨ Side cover
⑩ Transaxle case	⑪ Differential case	⑫ Final gear
⑬ Reduction gear	⑭ Idler gear	⑮ Output gear
⑯ Drive sprocket	⑰ Torque converter	⑱ Driven sprocket
⑲ Oil pump chain		

cardiagn.com

TRANSAXLE : Operation Status

INFOID:0000000012404412

×: Engaged or applied.

Selector lever position	Parking mechanism	Forward clutch	Reverse brake	Primary pulley	Secondary pulley	Chain belt	Final drive
P	×						
R			×	×	×	×	×
N							
D		×		×	×	×	×
L		×		×	×	×	×

TRANSAXLE : Transaxle Mechanism

INFOID:0000000012404413

TORQUE CONVERTER (WITH LOCK-UP FUNCTION)

In the same way as a conventional A/T, the torque converter is a system that increases the engine torque and transmits the torque to the transaxle. A symmetrical 3-element, 1-stage, 2-phase type is used here.

OIL PUMP

Utilizes a vane-type oil pump that is driven by the engine through the oil pump drive chain in order to increase efficiency of pump discharge volume in low-speed zone and optimize pump discharge volume in high-speed zone. Discharged oil from oil pump is transmitted to control valve. It is used as the oil of primary and secondary pulley operation, the oil of clutch operation, and the lubricant for each part.

PLANETARY GEAR

- A planetary gear type of forward/reverse selector mechanism is installed between the torque converter and primary pulley.
- The power from the torque converter is input via the input shaft, operating a wet multi-plate clutch by means of hydraulic pressure to switch between forward and reverse driving.

Operation of Planetary gear

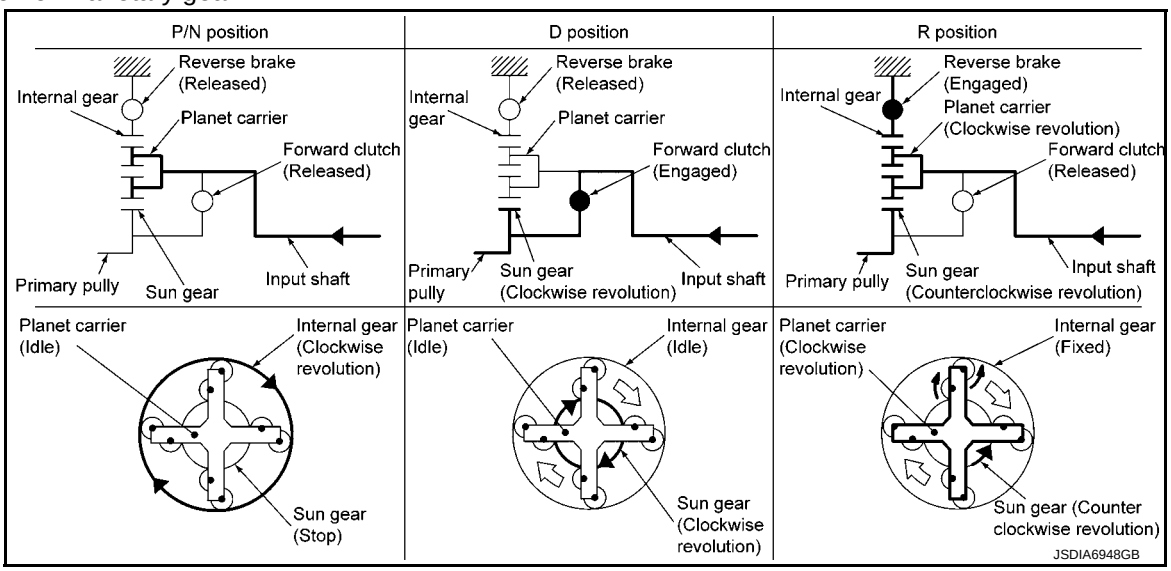

BELT & PULLEY

It is composed of a pair of pulleys (the groove width is changed freely in the axial direction) and the chain belt .The groove width changes according to wrapping radius of chain belt and pulley from low status to overdrive status continuously with non-step. It is controlled with the oil pressures of primary pulley and secondary pulley.

Chain belt

cardiagn.com

The chain belt consists of approximately 150 locker pins ① and 1,000 link plates ②. Chains are rotated by locker pins sandwiched by pulleys. This produces tension difference in chains among pulleys. Accordingly, the power is transferred by the tension.

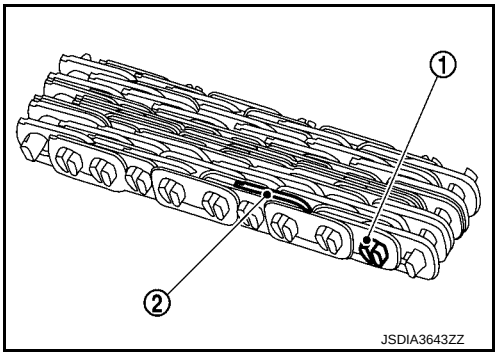

Pulley

The primary pulley (input shaft side) and the secondary pulley (output shaft side) have the shaft with slope (fixed cone surface), movable sheave (movable cone surface that can move in the axial direction) and oil pressure chamber at the back of the movable sheave.

The movable sheave slides on the shaft to change the groove width of the pulley. Input signals of engine load (accelerator pedal opening), primary pulley speed and secondary pulley speed change the operation pressures of the primary pulley and the secondary pulley, and controls the pulley groove width.

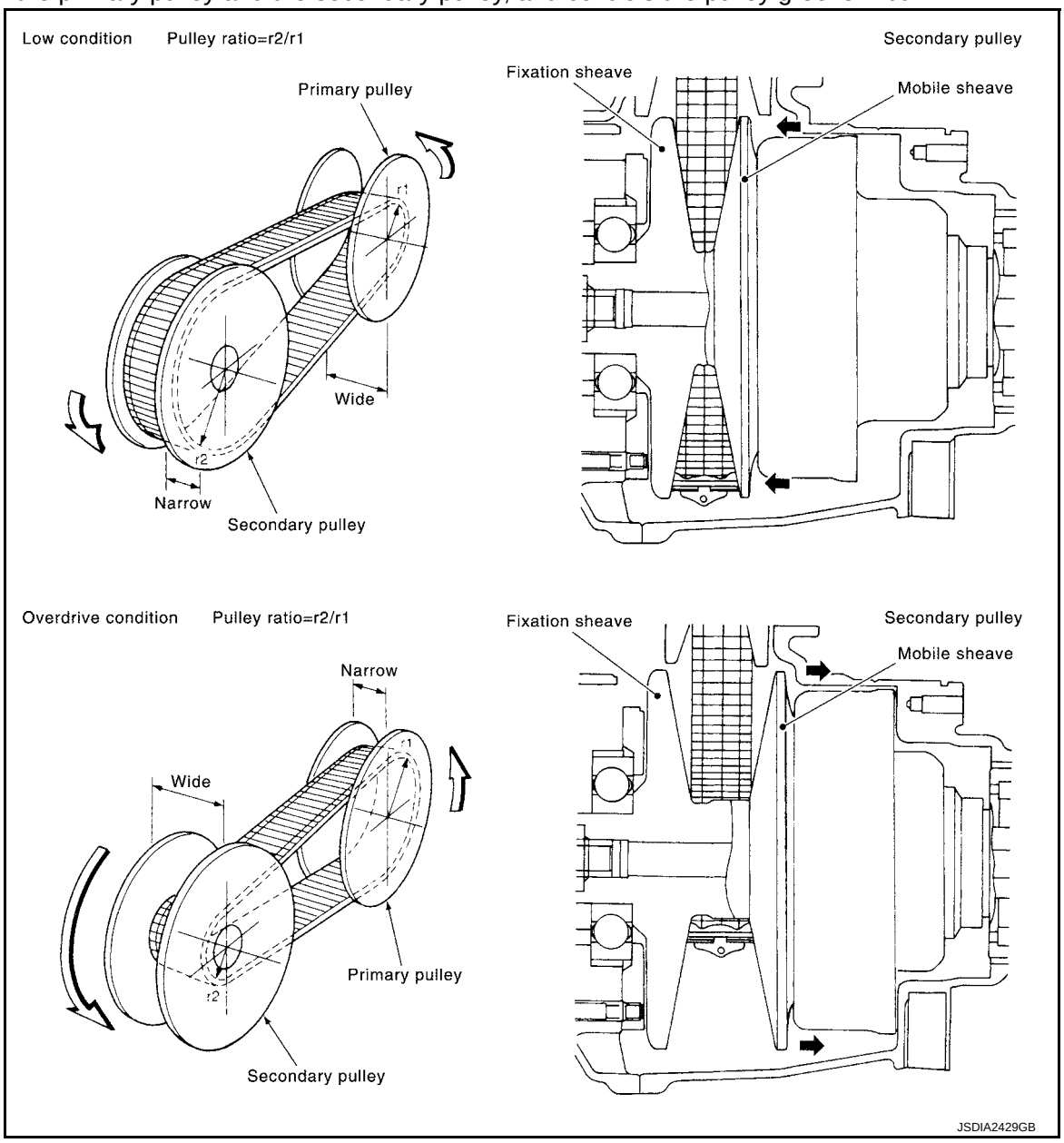

FINAL DRIVE AND DIFFERENTIAL

cardiagn.com

The deceleration gears are composed of 2 stages: primary deceleration (output gear, idler gear pair) and secondary deceleration (reduction gear, final gear pair). All of these gears are helical gears.
The lubrication oil is the same as the CVT fluid which lubricates the entire transaxle.

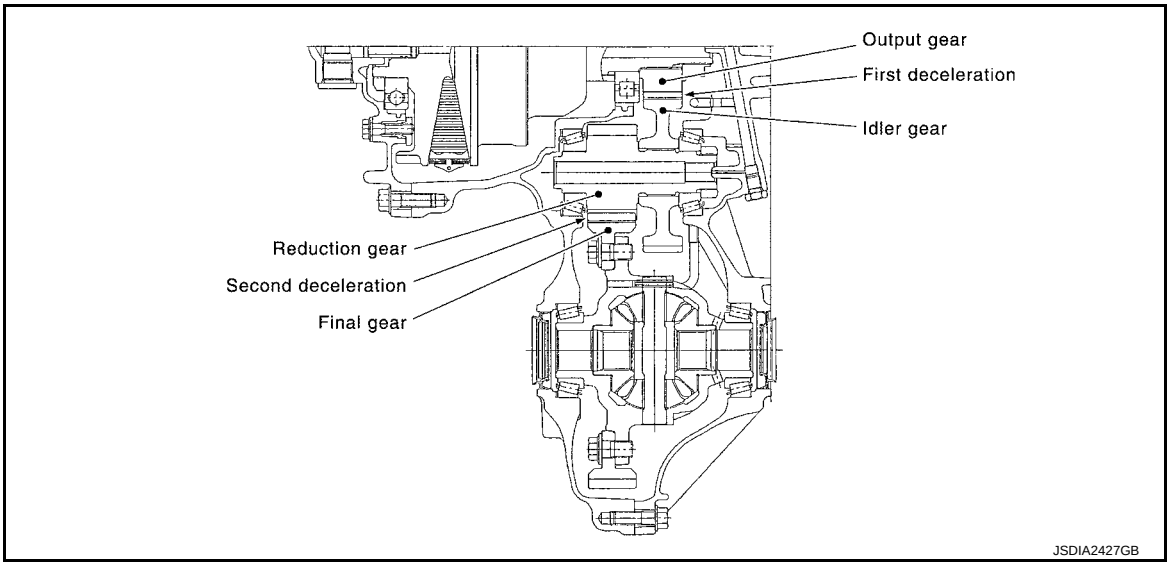

TRANSAXLE : Oil Pressure System

INFOID:0000000012404414

Oil pressure required for operation of the transaxle transmission mechanism is generated by oil pump, oil pressure control valve, solenoid valve, etc.

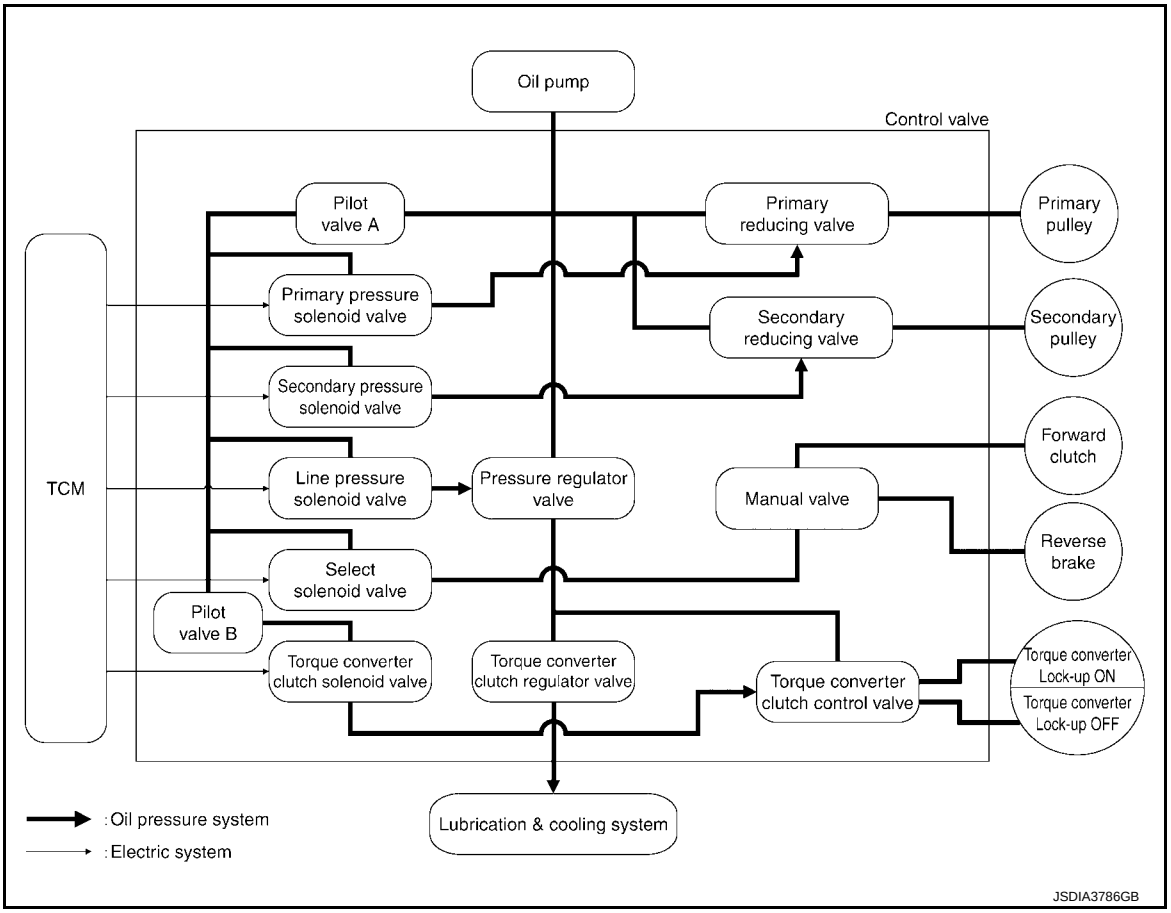

cardiagn.com

TRANSAXLE : Component Description

INFOID:0000000012404415

Part name	Function
Torque converter	Increases engine torque and transmits it to the transaxle.
Oil pump	Utilizes a vane-type oil pump that is driven by the engine through the oil pump drive chain in order to increase efficiency of pump discharge volume in low-speed zone and optimize pump discharge volume in high-speed zone. Discharged oil from oil pump is transmitted to control valve. It is used as the oil of primary and secondary pulley operation, the oil of clutch operation, and the lubricant for each part.
Forward clutch	The forward clutch is wet and multiple plate type clutch that consists of clutch drum, piston, drive plate, and driven plate. It is a clutch to move the vehicle forward by activating piston hydraulically, engaging plates, and directly connecting sun gear and input shaft.
Reverse brake	The reverse brake is a wet multiple-plate type brake that consists of transaxle case, piston, drive plate, and driven plate. It is a brake to move the vehicle in reverse by activating piston hydraulically, engaging plates, and fixing planetary gear.
Internal gear	The internal gear is directly connected to forward clutch drum. It is a gear that moves the outer edge of pinion planet of planet carrier. It transmits power to move the vehicle in reverse when the planet carrier is fixed.
Planet carrier	Composed of a carrier, pinion planet, and pinion shaft. This gear fixes and releases the planet carrier in order to switch between forward and reverse driving.
Sun gear	Sun gear is a set part with planet carrier and internal gear. It transmits transmitted force to primary fixed sheave. It rotates in forward or reverse direction according to activation of either forward clutch or reverse brake.
Input shaft	The input shaft is directly connected to forward clutch drum and transmits traction force from torque converter. In shaft center, there are holes for hydraulic distribution to primary pulley and hydraulic distribution for lockup ON/OFF.
Primary pulley	It is composed of a pair of pulleys (the groove width is changed freely in the axial direction) and the chain belt. The groove width changes according to wrapping radius of steel belt and pulley from low status to overdrive status continuously with non-step. It is controlled with the oil pressures of primary pulley and secondary pulley.
Secondary pulley	
Chain belt	
Manual shaft	When the manual shaft is in the P position, the parking rod that is linked to the manual shaft rotates the parking pole. When the parking pole rotates, it engages with the parking gear, fixing the parking gear. As a result, the secondary pulley that is integrated with the parking gear is fixed.
Parking rod	
Parking pawl	
Parking gear	
Output gear	The deceleration gears are composed of 2 stages: primary deceleration (output gear, idler gear pair) and secondary deceleration (reduction gear, final gear pair). All of these gears are helical gears.
Idler gear	
Reduction gear	
Differential	
Torque converter regulator valve	Adjusts the feed pressure to the torque converter to the optimum pressure corresponding to the driving condition.
Pressure regulator valve	Adjusts the discharge pressure from the oil pump to the optimum pressure (line pressure) corresponding to the driving condition.
Torque converter clutch control valve	Adjusts the torque converter engage and disengage pressures.
Manual valve	Distributes the clutch operation pressure to each circuit according to the selector lever position.
Secondary reducing valve	Reduces line pressure and adjusts secondary pressure.
Primary reducing valve	Reduces line pressure and adjusts primary pressure.
Pilot valve A	Reduces line pressure and adjusts pilot pressure to the solenoid valves listed below. • Primary pressure solenoid valve • Secondary pressure solenoid valve • Select solenoid valve • Line pressure solenoid valve
Pilot valve B	Reduces pilot pressure and adjusts pilot pressure to the torque converter clutch solenoid valve.

FLUID COOLER & FLUID WARMER SYSTEM

cardiagn.com

FLUID COOLER & FLUID WARMER SYSTEM : System Description

INFOID:0000000012404416

CVT FLUID COOLER SCHEMATIC

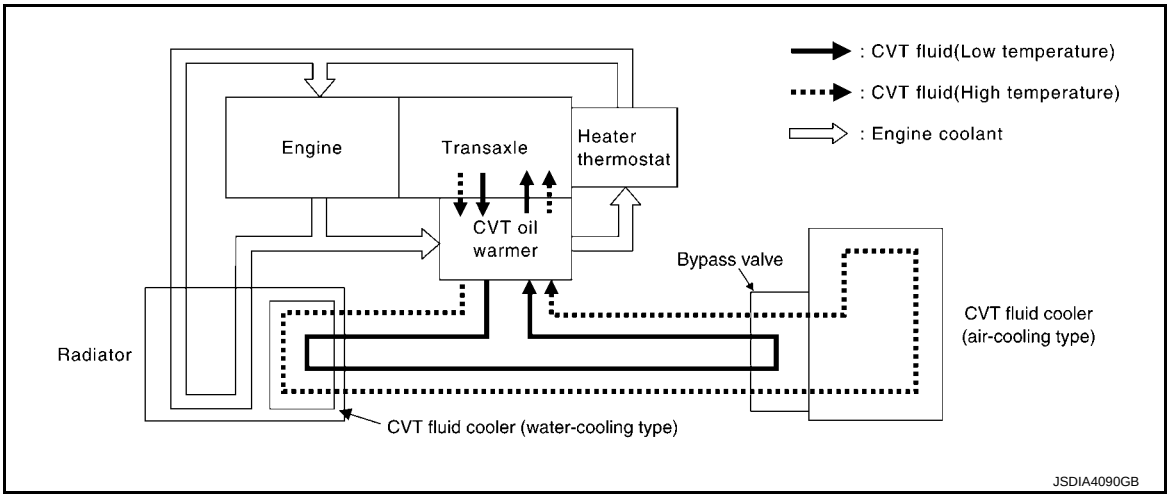

COMPONENT DESCRIPTION

CVT Oil Warmer

- The CVT oil warmer (1) is installed on the front part of transaxle assembly.
- When engine is started while engine and CVT are cold, engine coolant temperature rises more quickly than CVT fluid temperature. CVT oil warmer is provided with two circuits for CVT and engine coolant respectively so that warmed engine coolant warms CVT quickly. This helps shorten CVT warming up time, improving fuel economy.
- A cooling effect is obtained when CVT fluid temperature is high.

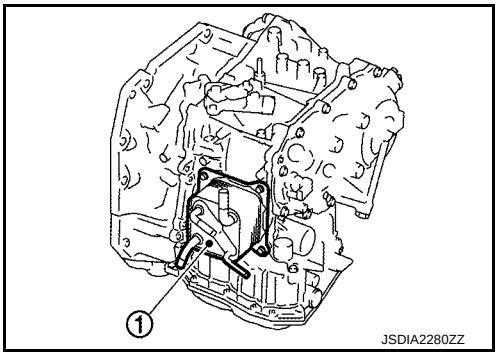

Heater Thermostat

- The heater thermostat (1) is installed on the front part of transaxle assembly.
- The heater thermostat open and close with set temperature.

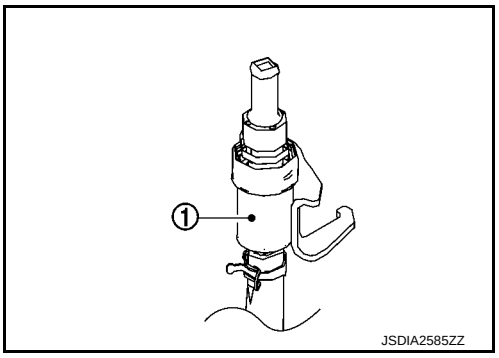

SHIFT LOCK SYSTEM

cardiagn.com

SHIFT LOCK SYSTEM : System Description

INFOID:0000000012404417

The selector lever cannot be shifted from the P position unless the brake pedal is depressed while the ignition switch is set to ON. The shift lock is unlocked by turning the shift lock solenoid ON when the ignition switch is set to ON, the park position switch is turned ON (selector lever is in P position), and the stop lamp switch is turned ON (brake pedal is depressed) as shown in the operation chart in the figure. Therefore, the shift lock solenoid receives no ON signal and the shift lock remains locked if all of the above conditions are not fulfilled. (However, selector operation is allowed if the shift lock release button is pressed.).

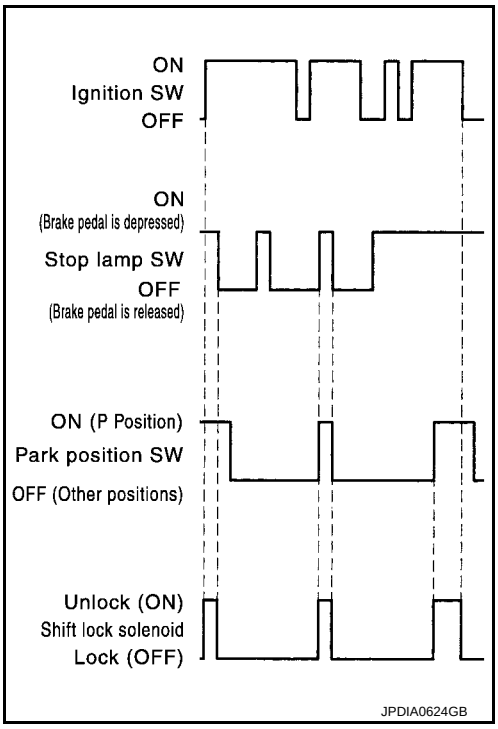

SHIFT LOCK OPERATION AT “P” POSITION

When Brake Pedal Is Not Depressed (No Selector Operation Allowed)

The shift lock solenoid (1) is turned OFF (not energized) and the solenoid rod (A) is extended with the spring when the brake pedal is not depressed (no selector operation allowed) with the ignition switch ON.

The connecting lock lever (B) is located at the position shown in the figure when the solenoid rod is extended. It prevents the movement of the detent rod (C). For these reasons, the selector lever cannot beshifted from the P position.

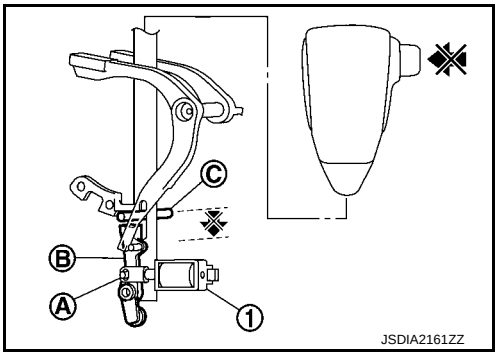

When Brake Pedal Is Depressed (Shift Operation Allowed)

The shift lock solenoid (1) is turned ON (energized) when the brake pedal is depressed with the ignition switch ON. The solenoid rod (A) is compressed by the electromagnetic force. The connecting lock lever (B) rotates when the solenoid is activated. Therefore, the detent rod (C) can be moved. For these reasons, the selector lever can be shifted to other positions.

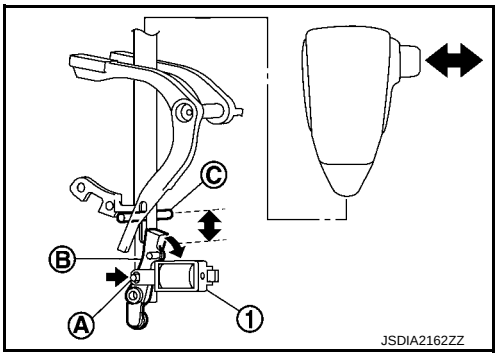

“P” POSITION HOLD MECHANISM (IGNITION SWITCH LOCK)

cardiagn.com

The shift lock solenoid (1) is not energized when the ignition switch is in any position other than ON. In this condition, the shift mechanism is locked and P position is held. The operation cannot be performed from P position if the brake pedal is depressed with the ignition switch ON when the operation system of shift lock solenoid is malfunctioning. However, the lock lever (B) is forcibly rotated and the shift lock is released when the shift lock release button (A) is pressed from above. Then the selector operation from P position can be performed.

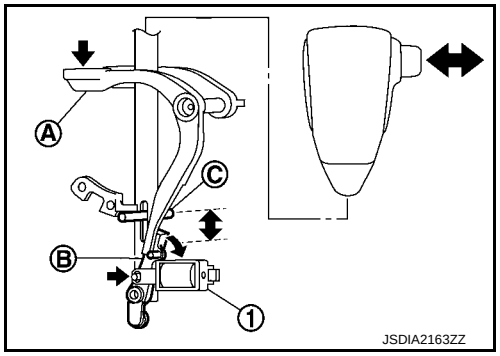

CAUTION:

Use the shift lock release button only when the selector lever cannot be operated even if the brake pedal is depressed with the ignition switch ON.

cardiagn.com

SYSTEM

CVT CONTROL SYSTEM

CVT CONTROL SYSTEM : System Description

INFOID:0000000012404418

SYSTEM DIAGRAM

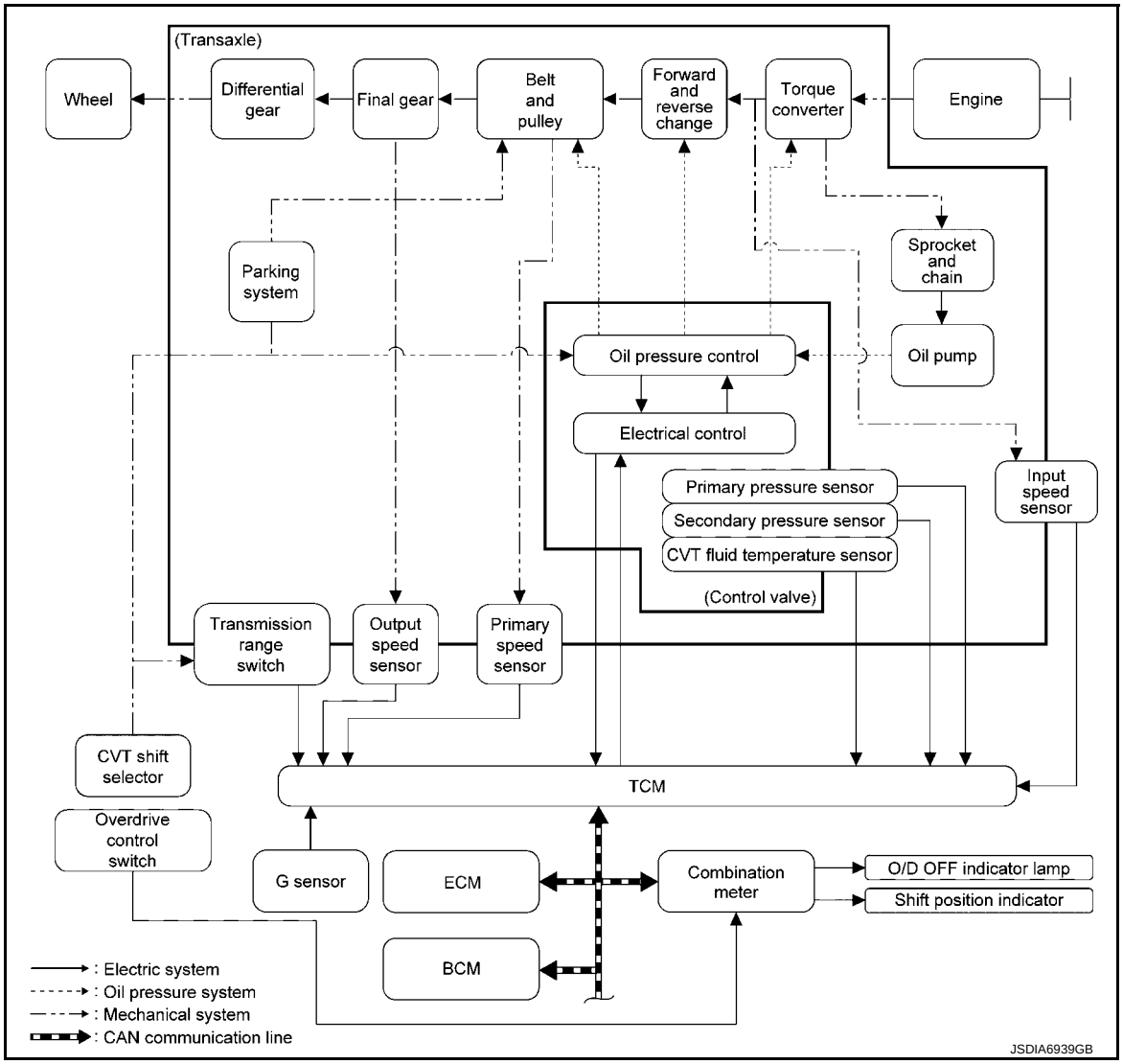

MAIN CONTROL CONTENTS OF TCM

Controls	Reference
Line pressure control	TM-33, "LINE PRESSURE CONTROL : System Description"
Shift control	TM-34, "SHIFT CONTROL : System Description"
Select control	TM-36, "SELECT CONTROL : System Description"
Lock-up control	TM-37, "LOCK-UP CONTROL : System Description"
Fail-safe	TM-54, "Fail-safe"
Self-diagnosis function	TM-42, "CONSULT Function"
Communication function with CONSULT	TM-42, "CONSULT Function"

SYSTEM DESCRIPTION

cardiagn.com

- CVT detects the vehicle driving status from switches, sensors and signals, and controls the vehicle so that the optimum shift position and shift timing may always be achieved. It also controls the vehicle to reduce shift and lockup shock, etc.
- Receives input signals from switches and sensors.
- Sends the output signal necessary for operation of solenoid valves, and evaluates the line pressure, shift timing, lockup operation, engine brake performance, etc.
- If a malfunction occurs on the electric system, activate the fail-safe mode only to drive the vehicle.

LIST OF CONTROL ITEMS AND INPUT/OUTPUT

Control Item		Shift control	Line pressure control	Select control	Lock-up control	Fail-safe function*
Input	Engine torque signal (CAN communication)	×	×	×	×	×
	Engine speed signal (CAN communication)	×	×	×	×	×
	Accelerator pedal position signal (CAN communication)	×	×	×	×	
	Closed throttle position signal (CAN communication)	×	×		×	
	Stop lamp switch signal (CAN communication)	×	×	×	×	
	Primary pressure sensor					×
	Secondary pressure sensor	×	×			×
	CVT fluid temperature sensor	×	×	×	×	×
	Primary speed sensor	×	×	×	×	×
	Output speed sensor	×	×		×	×
	Input speed sensor	×	×	×	×	×
	Transmission range switch	×	×	×	×	×
	Overdrive control switch (CAN communication)	×	×		×	
Output	Line pressure solenoid valve	×	×	×		×
	Primary pressure solenoid valve	×	×			×
	Torque converter clutch solenoid valve				×	×
	Secondary pressure solenoid valve	×	×			×
	Select solenoid valve	×		×		×
	Shift position indicator (CAN communication)			×		
	O/D OFF indicator lamp (CAN communication)	×				

*: If these input/output signals show errors, TCM activates the fail-safe function.

CVT CONTROL SYSTEM : Fail-safe

INFOID:0000000012936148

TCM has a fail-safe mode. The mode functions so that operation can be continued even if the signal circuit of the main electronically controlled input/output parts is damaged.
If the vehicle shows following behaviors including “poor acceleration”, a malfunction of the applicable system is detected by TCM and the vehicle may be in a fail-safe mode. At this time, check the DTC code and perform inspection and repair according to the malfunction diagnosis procedures.

Fail-safe function

cardiagn.com

DTC	Vehicle behavior	Conditions of vehicle
P062F	Not changed from normal driving	—
P0705	• Shift position indicator on combination meter is not displayed • Selector shock is large • Start is slow • Acceleration is slow • Lock-up is not performed	—
P0706	• Shift position indicator on combination meter is not displayed • Selector shock is large • Start is slow • Acceleration is slow • Lock-up is not performed	—
P0711	• Start is slow • Acceleration is slow	Engine coolant temperature when engine start: Temp. ≥ 10°C (50°F)
	• Selector shock is large • Start is slow • Acceleration is slow	Engine coolant temperature when engine start: –35°C (–31°F) ≤ Temp. < 10°C (50°F)
	• Selector shock is large • Start is slow • Acceleration is slow	Engine coolant temperature when engine star: Temp. < –35°C (–31°F)
P0712	• Start is slow • Acceleration is slow	Engine coolant temperature when engine start: Temp. ≥ 10°C (50°F)
	• Selector shock is large • Start is slow • Acceleration is slow	Engine coolant temperature when engine start: –35°C (–31°F) ≤ Temp. < 10°C (50°F)
	• Selector shock is large • Start is slow • Acceleration is slow	Engine coolant temperature when engine star: Temp. < –35°C (–31°F)
P0713	• Start is slow • Acceleration is slow	Engine coolant temperature when engine start: Temp. ≥ 10°C (50°F)
	• Selector shock is large • Start is slow • Acceleration is slow	Engine coolant temperature when engine start: –35°C (–31°F) ≤ Temp. < 10°C (50°F)
	• Selector shock is large • Start is slow • Acceleration is slow	Engine coolant temperature when engine star: Temp. < –35°C (–31°F)
P0715	• Start is slow • Acceleration is slow • Lock-up is not performed	—
P0717	• Start is slow • Acceleration is slow • Lock-up is not performed	—
P0740	• Start is slow • Acceleration is slow • Lock-up is not performed	—
P0743	• Start is slow • Acceleration is slow • Lock-up is not performed	—
P0744	• Start is slow • Acceleration is slow • Lock-up is not performed	—
P0746	• Selector shock is large • Start is slow • Acceleration is slow • Lock-up is not performed	—

cardiagn.com

DTC	Vehicle behavior	Conditions of vehicle
P0776	• Selector shock is large • Start is slow • Acceleration is slow • Lock-up is not performed • Vehicle speed is not increased	When a malfunction occurs on the low oil pressure side
	• Selector shock is large • Start is slow • Acceleration is slow • Lock-up is not performed	When a malfunction occurs on the high oil pressure side
P0778	• Selector shock is large • Start is slow • Acceleration is slow • Lock-up is not performed	—
P0779	• Selector shock is large • Start is slow • Acceleration is slow • Lock-up is not performed	—
P0841	Not changed from normal driving	—
P0847	Not changed from normal driving	—
P0848	Not changed from normal driving	—
P084C	Not changed from normal driving	—
P084D	Not changed from normal driving	—
P0863	• Selector shock is large • Start is slow • Acceleration is slow • Lock-up is not performed	—
P0890	• Selector shock is large • Start is slow • Acceleration is slow • Lock-up is not performed • Vehicle speed is not increased	—
P0962	• Selector shock is large • Start is slow • Acceleration is slow • Lock-up is not performed	—
P0963	• Selector shock is large • Start is slow • Acceleration is slow • Lock-up is not performed	—
P0965	• Selector shock is large • Start is slow • Acceleration is slow • Lock-up is not performed	When a malfunction occurs on the low oil pressure side
	• Selector shock is large • Lock-up is not performed	When a malfunction occurs on the high oil pressure side
P0966	• Selector shock is large • Start is slow • Acceleration is slow • Lock-up is not performed	—
P0967	• Selector shock is large • Start is slow • Acceleration is slow • Lock-up is not performed	—
P1586	—	—
P1588	—	—

cardiagn.com

DTC	Vehicle behavior	Conditions of vehicle
P2765	• Start is slow • Acceleration is slow • Lock-up is not performed	—
P2813	• Selector shock is large • Start is slow • Acceleration is slow • Vehicle speed is not increased	When a malfunction occurs on the low oil pressure side
	• Selector shock is large	When a malfunction occurs on the high oil pressure side
P2814	• Selector shock is large	—
P2815	• Selector shock is large	—
U0073	• Selector shock is large • Start is slow • Acceleration is slow • Lock-up is not performed	—
U0100	• Selector shock is large • Start is slow • Acceleration is slow • Lock-up is not performed	—
U0140	• Not changed from normal driving	—
U0141	• Not changed from normal driving	—
U0155	• Not changed from normal driving	—
U0300	• Selector shock is large • Start is slow • Acceleration is slow • Lock-up is not performed	—
U1000	• Not changed from normal driving	—
U1117	• Not changed from normal driving	—

CVT CONTROL SYSTEM : Protection Control

INFOID:0000000012936149

The TCM becomes the protection control status temporarily to protect the safety when the safety of TCM and transmission is lost. It automatically returns to the normal status if the safety is secured.
The TCM has the following protection control.

CONTROL FOR WHEEL SPIN

Control	When a wheel spin is detected, the engine output and gear ratio are limited and the line pressure is increased. Limits engine output when a wheel spin occurs in any of right and left drive wheels.
Vehicle behavior in control	If the accelerator is kept depressing during wheel spin, the engine revolution and vehicle speed are limited to a certain degree.
Normal return condition	Wheel spin convergence returns the control to the normal control.

TORQUE IS REDUCED WHEN DRIVING WITH THE REVERSE GEAR

Control	Engine output is controlled according to a vehicle speed while reversing the vehicle.
Vehicle behavior in control	Power performance may be lowered while reversing the vehicle.
Normal return condition	Torque returns to normal by positioning the selector lever in a range other than “R” position.

CONTROL WHEN FLUID TEMPERATURE IS HIGH

cardiagn.com

Control	When the CVT fluid temperature is high, the gear shift permission maximum revolution and the maximum torque are reduced than usual to prevent increase of the oil temperature.
Vehicle behavior in control	Power performance may be lowered, compared to normal control.
Normal return condition	The control returns to the normal control when CVT fluid temperature is lowered.

REVERSE PROHIBIT CONTROL

Control	The reverse brake is controlled to avoid becoming engaged when the selector lever is set in “R” position while driving in forward direction at more than the specified speed.
Vehicle behavior in control	If the selector lever is put at “R” position when driving with the forward gear, the gear becomes neutral, not reverse.
Normal return condition	The control returns to normal control when the vehicle is driven at low speeds. (The reverse brake becomes engaged.)

LINE PRESSURE CONTROL

LINE PRESSURE CONTROL : System Description

INFOID:0000000012404421

SYSTEM DIAGRAM

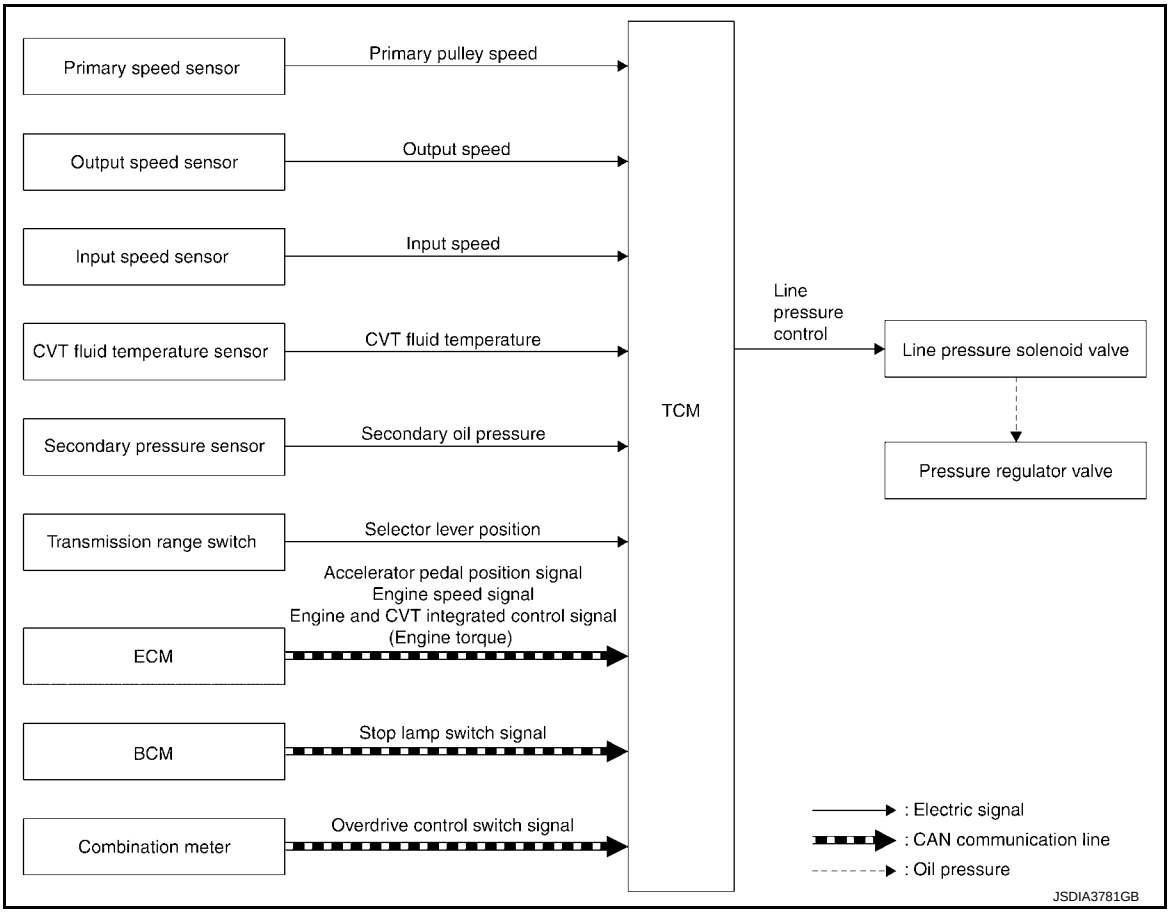

DESCRIPTION

Highly accurate line pressure control (secondary pressure control) reduces friction for improvement of fuel economy.

Normal Oil Pressure Control

Appropriate line pressure and secondary pressure suitable for driving condition are determined based on the accelerator pedal position, engine speed, primary pulley (input) speed, secondary pulley (output) speed, vehi-

cardiagn.com

cle speed, input torque, stop lamp switch signal, transmission range switch signal, lock-up signal, power voltage, target shift ratio, oil temperature, oil pressure, and overdrive control switch signal.

Secondary Pressure Feedback Control

In normal oil pressure control and oil pressure control in shifting, highly accurate secondary pressure is determined by detecting the secondary pressure using an oil pressure sensor and by feedback control.

SHIFT CONTROL

SHIFT CONTROL : System Description

INFOID:0000000012404422

SYSTEM DIAGRAM

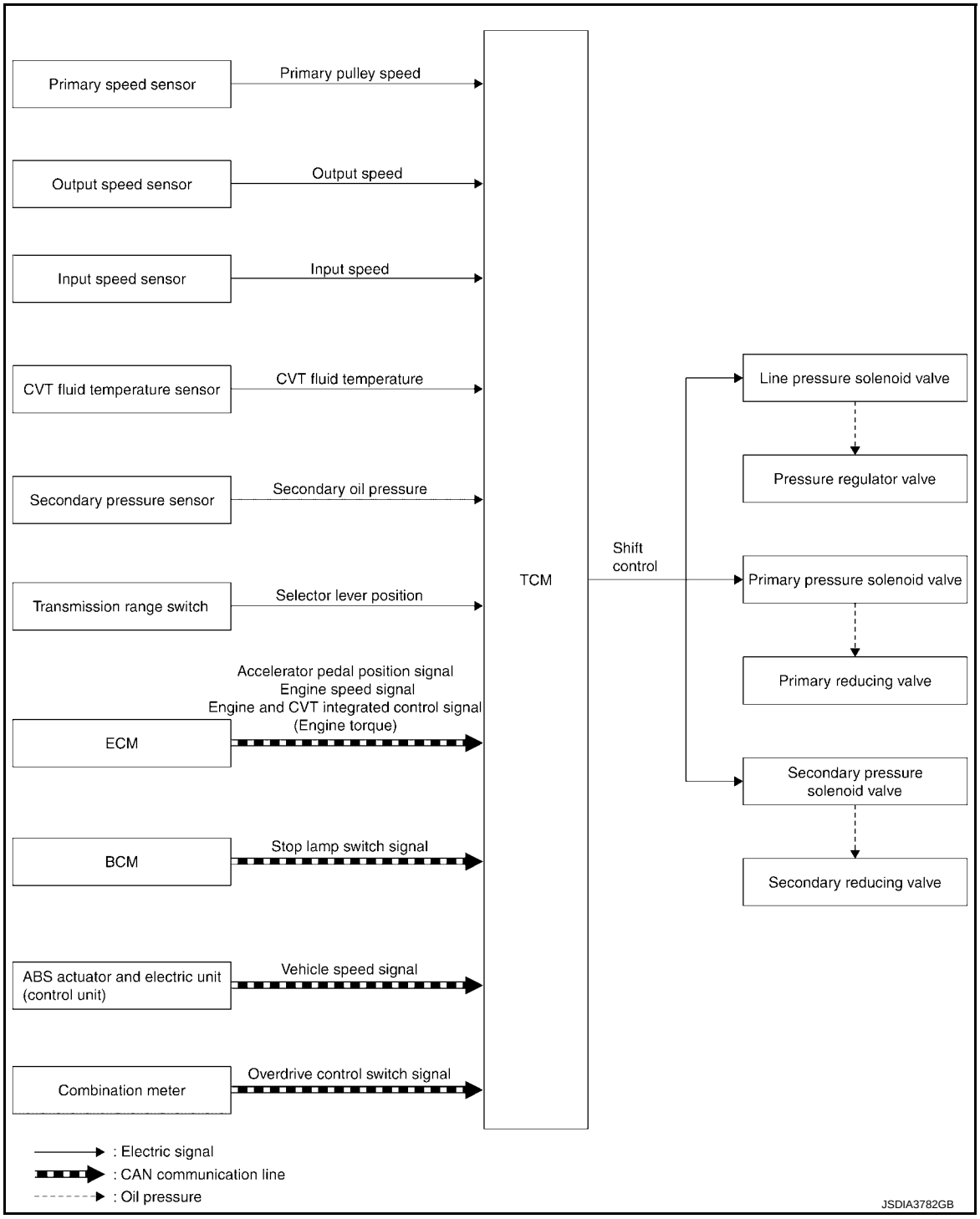

DESCRIPTION

cardiagn.com

To select the gear ratio that can give the driving force to meet driver's intent or vehicle situation, the vehicle driving condition such as vehicle speed or accelerator pedal position is detected and the most appropriate gear ratio is selected and the shifting method before reaching the speed is determined. The information is output to the primary pressure solenoid valve and secondary pressure solenoid valve to control the line pressure input/output to the pulley, to determine the pulley (movable pulley) position and to control the gear position.

D Position (Normal)

Gear shifting is performed in all shifting ranges from the lowest to the highest gear ratio.

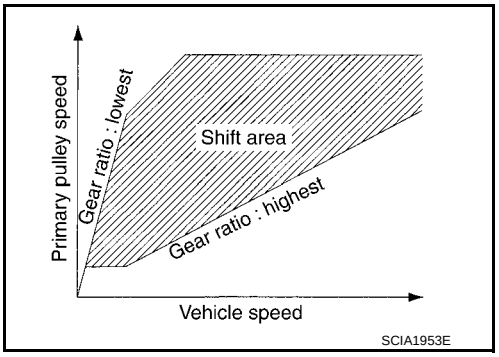

D Position (O/D OFF)

The gear ratio is generally high by limiting the shifting range on the high side, and this always generates a large driving power.

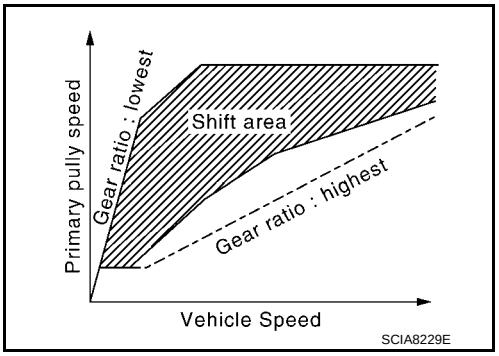

L Position

By limiting the shifting range only to the lowest of the gear ratio, a large driving force and engine brake are obtained.

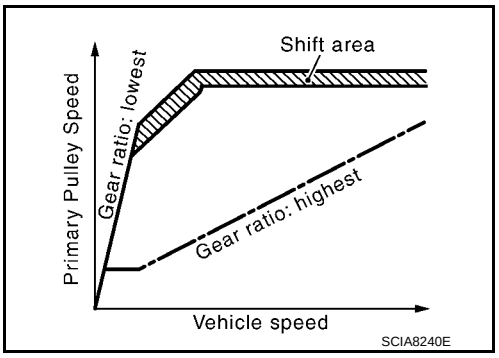

Hill Climbing And Descending Control

If a downhill is detected with the accelerator pedal is released, the system performs downshift to increase the engine brake force so that vehicle may not be accelerated more than necessary. If a climbing hill is detected, the system improves the acceleration performance in re-acceleration by limiting the gear shift range on the high side.

NOTE:

cardiagn.com

For engine brake control on a downhill, the control can be stopped with CONSULT.

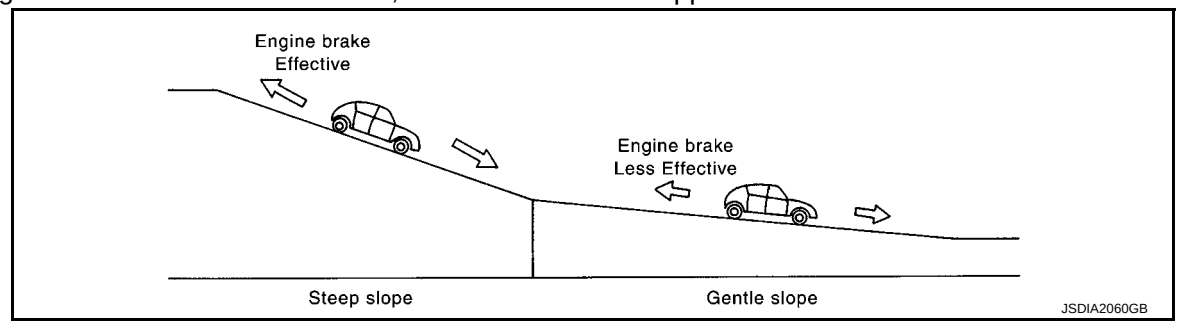

Control In Acceleration

From change of the vehicle speed or accelerator pedal position, the acceleration request level of the driver or driving scene is evaluated. In start or acceleration during driving, the gear shift characteristics with linearity of revolution increase and vehicle speed increase are gained to improve the acceleration feel.

- When the accelerator pedal is depressed 4/8 or more in D position, CVT performs step shifting to allow the vehicle speed and engine speed to increase simultaneously. This improves the feel of acceleration and enables the fuel economy by preventing unnecessary rise in engine speed, compared to the conventional-shifting.

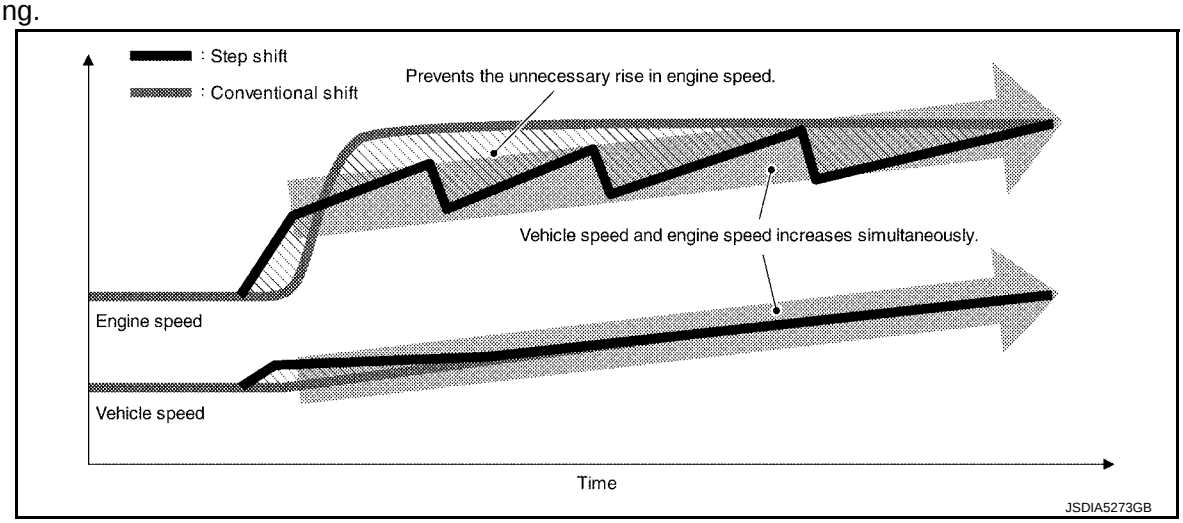

SELECT CONTROL

SELECT CONTROL : System Description

INFOID:0000000012404423

SYSTEM DIAGRAM

cardiagn.com

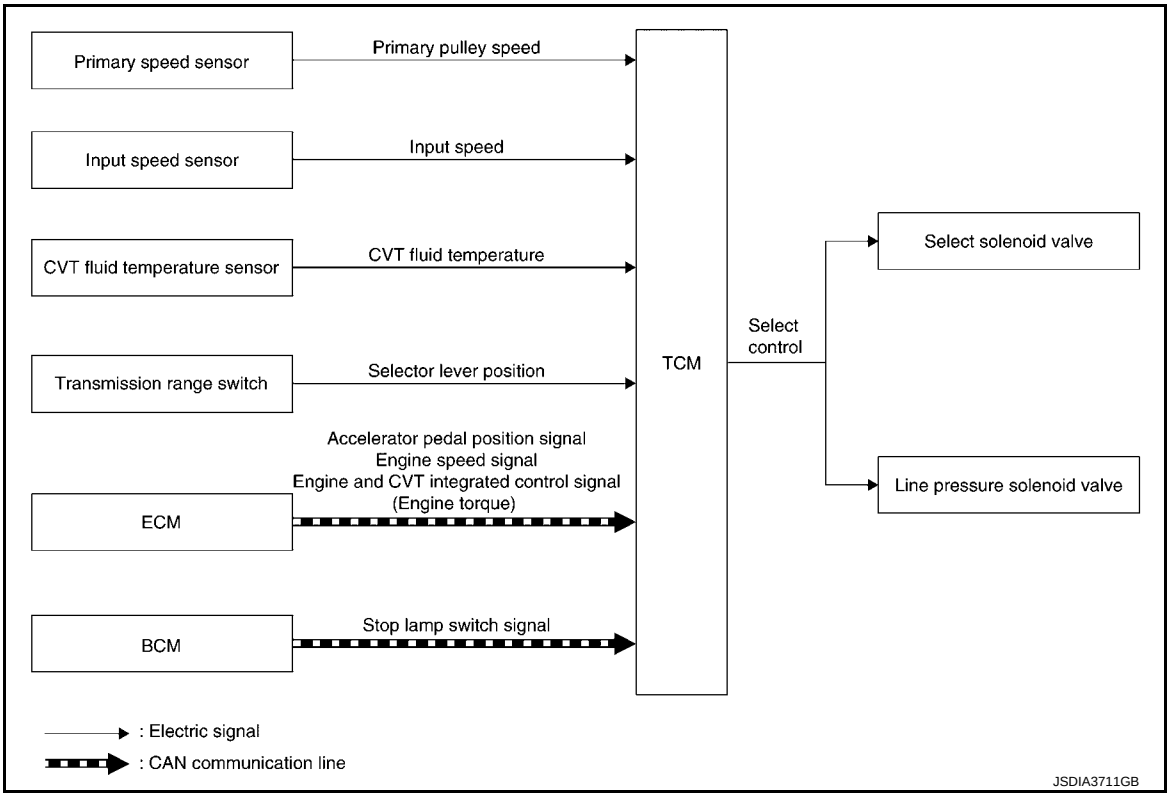

DESCRIPTION

Based on accelerator pedal angle, engine speed, primary pulley speed, and the input speed, the optimum operating pressure is set to reduce impact of a selector lever operation while shifting from “N” (“P”) to “D” (“R”) position.

LOCK-UP CONTROL

LOCK-UP CONTROL : System Description

INFOID:0000000012404424

SYSTEM DIAGRAM

cardiagn.com

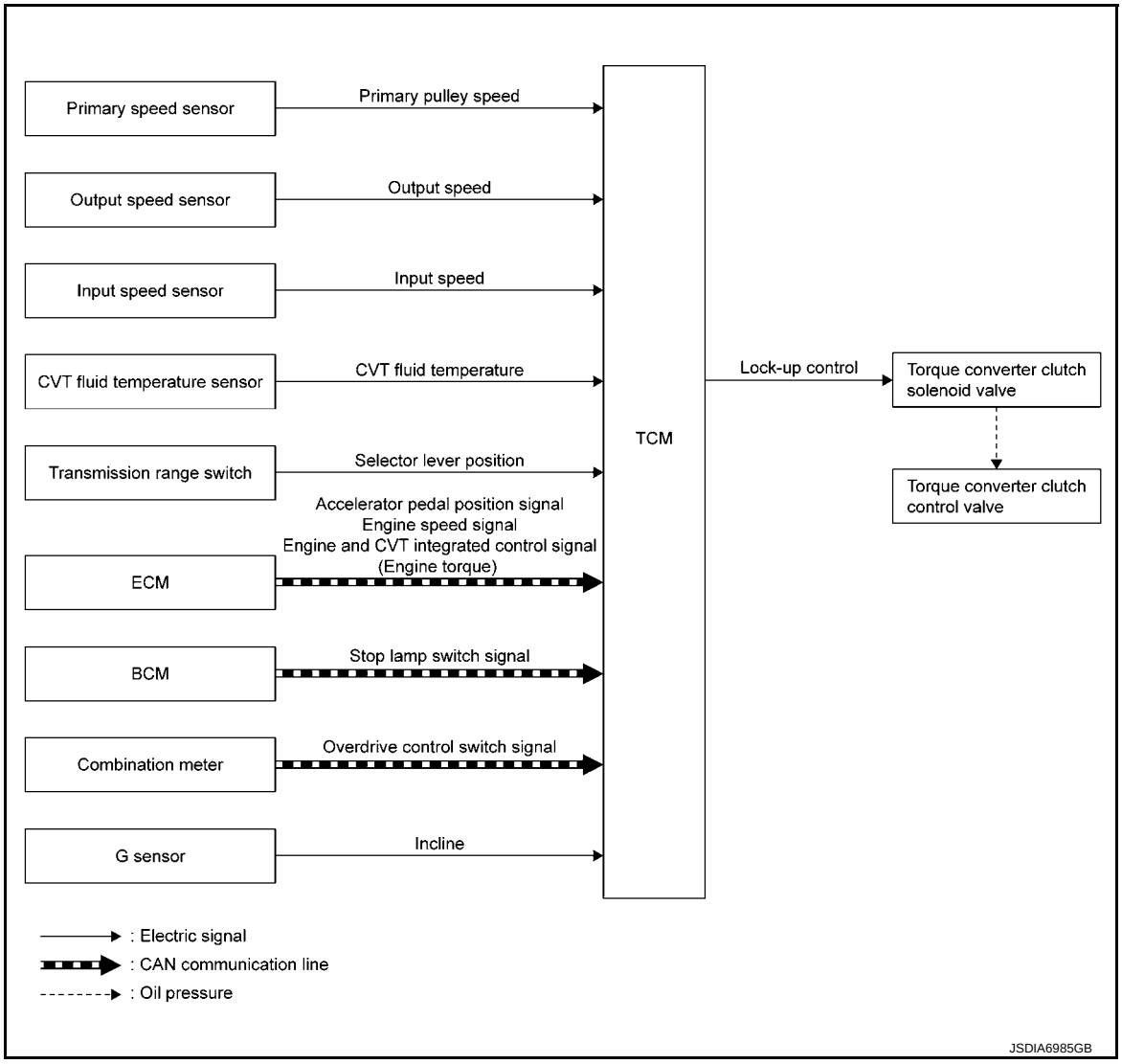

DESCRIPTION

- Controls for improvement of the transmission efficiency by engaging the torque converter clutch in the torque converter and eliminating slip of the converter. Achieves comfortable driving with slip control of the torque converter clutch.
- The oil pressure feed circuit for the torque converter clutch piston chamber is connected to the torque converter clutch control valve. The torque converter clutch control valve is switched by the torque converter clutch solenoid valve with the signal from TCM. This controls the oil pressure circuit, which is supplied to the torque converter clutch piston chamber, to the release side or engagement side.
- If the CVT fluid temperature is low or the vehicle is in fail-safe mode due to malfunction, lock-up control is prohibited.

Lock-up engagement

In lock-up engagement, the torque converter clutch solenoid valve makes the torque converter clutch control valve locked up to generate the lock-up apply pressure. This pushes the torque converter clutch piston for engagement.

Lock-up release condition

In lock-up release, the torque converter clutch solenoid valve makes the torque converter clutch control valve non-locked up to drain the lock-up apply pressure. This does not engage the torque converter clutch piston.

cardiagn.com

ON BOARD DIAGNOSTIC (OBD) SYSTEM

Diagnosis Description

INFOID:0000000012404425

This is an on board diagnosis system which records diagnosis information related to the exhaust gases. It detects malfunctions related to sensors and actuators. The malfunctions are indicated by means of the malfunction indicator lamp (MIL) and are stored as DTC in the ECU memory. The diagnosis information can be checked using a diagnosis tool (GST: Generic Scan Tool).

GST (Generic Scan Tool)

INFOID:0000000012404426

The GST is connected to the diagnosis connector on the vehicle and communicates with the on-board control units to perform diagnosis. The diagnosis connector is the same as for CONSULT. Refer to GI-49, "Description".

cardiagn.com

DIAGNOSIS SYSTEM (TCM)

DIAGNOSIS DESCRIPTION

DIAGNOSIS DESCRIPTION : 1 Trip Detection Diagnosis and 2 Trip Detection Diagnosis

INFOID:0000000012404427

NOTE:
"Start the engine and turn OFF the ignition switch after warm-up." This is defined as 1 trip.

1 TRIP DETECTION DIAGNOSIS

When initial malfunction is detected, TCM memorizes DTC. In these diagnoses, some illuminate MIL and some do not. Refer to TM-59, "DTC Index".

2 TRIP DETECTION DIAGNOSIS

When initial malfunction is detected, TCM memorizes DTC of the 1st trip. MIL does not light at this stage. <1 trip>
If the same malfunction is detected again in next driving, TCM memorizes DTC. When DTC is memorized, MIL lights. <2 trip>
"Trip" of the "2 trip detection diagnosis" indicates the driving mode that executes self-diagnosis during driving.

×: Check possible —: Check not possible

Item	DTC at the 1st trip		DTC		MIL	
	Display at the 1st trip	Display at the 2nd trip	Display at the 1st trip	Display at the 2nd trip	Illumination at the 1st trip	Illumination at the 2nd trip
1 trip detection diagnosis (Refer to TM-59, "DTC Index")	—	—	×	—	×	—
2 trip detection diagnosis (Refer to TM-59, "DTC Index")	×	—	—	×	—	×

DIAGNOSIS DESCRIPTION : DTC and DTC of 1st Trip

INFOID:0000000012404428

2 TRIP DETECTION DIAGNOSIS THAT ILLUMINATES MIL

- The DTC number of the 1st trip is the same as the DTC number.
- When a malfunction is detected at the 1st trip, TCM memorizes DTC of the 1st trip. MIL does not light at this stage. If the same malfunction is not detected at the 2nd trip (conforming to necessary driving conditions), DTC at the 1st trip is erased from TCM. If the same malfunction is detected at the 2nd trip, TCM memorizes DTC and MIL lights at the same time.
- The DTC of the 1st trip is specified in Service $01 of SAE J1979/ISO 15031-5. Since detection of DTC at the 1st trip does not illuminate MIL, warning for a problem is not given to a driver.
- For procedure to delete DTC and 1st trip DTC from TCM, refer to TM-42, "CONSULT Function".
- If DTC of the 1st trip is detected, it is necessary to check the cause according to the "Diagnosis flow". Refer to TM-71, "Flowchart of Trouble Diagnosis".

DIAGNOSIS DESCRIPTION : Malfunction Indicator Lamp (MIL)

INFOID:0000000012404429

- TCM not only detects DTC, but also sends the MIL signal to ECM through CAN communication. ECM sends the MIL signal to the combination meter through CAN communication according to the signal, and illuminates MIL.
- For malfunction indicator lamp (MIL) description, refer to EC-21, "Malfunction Indicator lamp (MIL)".

DIAGNOSIS DESCRIPTION : Counter System

INFOID:0000000012404430

RELATION BETWEEN DTC AT 1ST TRIP/DTC/MIL AND DRIVING CONDITIONS (FOR 2 TRIP DETECTION DIAGNOSIS THAT ILLUMINATES MIL)

- When initial malfunction is detected, TCM memorizes DTC of the 1st trip. MIL does not light at this stage.
- If the same malfunction is detected at the 2nd trip, TCM memorizes DTC and MIL lights at the same time.
- Then, MIL goes after driving the vehicle for 3 trips under "Driving condition B" without malfunction.
- DTC is displayed until 40 trips of "Driving condition A" are satisfied without detecting the same malfunction. DTC is erased when 40 trips are satisfied.

cardiagn.com

- When the self-diagnosis result is acceptable at the 2nd trip (conforming to driving condition B), DTC of the 1st trip is erased.

COUNTER SYSTEM LIST

Item	Driving condition	Trip
MIL (OFF)	B	3
DTC (clear)	A	40
DTC at 1st trip (clear)	B	1

DRIVING CONDITION

Driving condition A

Driving condition A is the driving condition that provides warm-up.
In specific, count-up is performed when all of the following conditions are satisfied.
- Engine speed is 400 rpm or more.
- After start of the engine, the water temperature increased by 20°C (36°F) or more.
- Water temperature was 70°C (158°F) or more.
- The ignition switch was changed from ON to OFF.

NOTE:
- If the same malfunction is detected regardless of the driving condition, reset the A counter.
- When the above is satisfied without detecting the same malfunction, count up the A counter.
- When MIL goes off due to the malfunction and the A counter reaches 40, the DTC is erased.

Driving condition B

Driving condition B is the driving condition that performs all diagnoses once.
In specific, count-up is performed when all of the following conditions are satisfied.
- Engine speed is 400 rpm or more.
- Water temperature was 70°C (158°F) or more.
- In closed loop control, vehicle speed of 70 – 120 km/h (43 – 75 MPH) continued for 60 seconds or more.
- In closed loop control, vehicle speed of 30 – 60 km/h (19 – 37 MPH) continued for 10 seconds or more.
- In closed loop control, vehicle speed of 4 km/h (2 MPH) or less and idle determination ON continued for 12 seconds or more.
- After start of the engine, 22 minutes or more have passed.
- The condition that the vehicle speed is 10 km/h (6 MPH) or more continued for 10 seconds or more in total.
- The ignition switch was changed from ON to OFF.

NOTE:
- If the same malfunction is detected regardless of the driving condition, reset the B counter.
- When the above is satisfied without detecting the same malfunction, count up the B counter.
- When the B counter reaches 3 without malfunction, MIL goes off.
- When the B counter is counted once without detecting the same malfunction after TCM memorizes DTC of the 1st trip, DTC of the 1st trip is erased.

cardiagn.com

TIME CHART

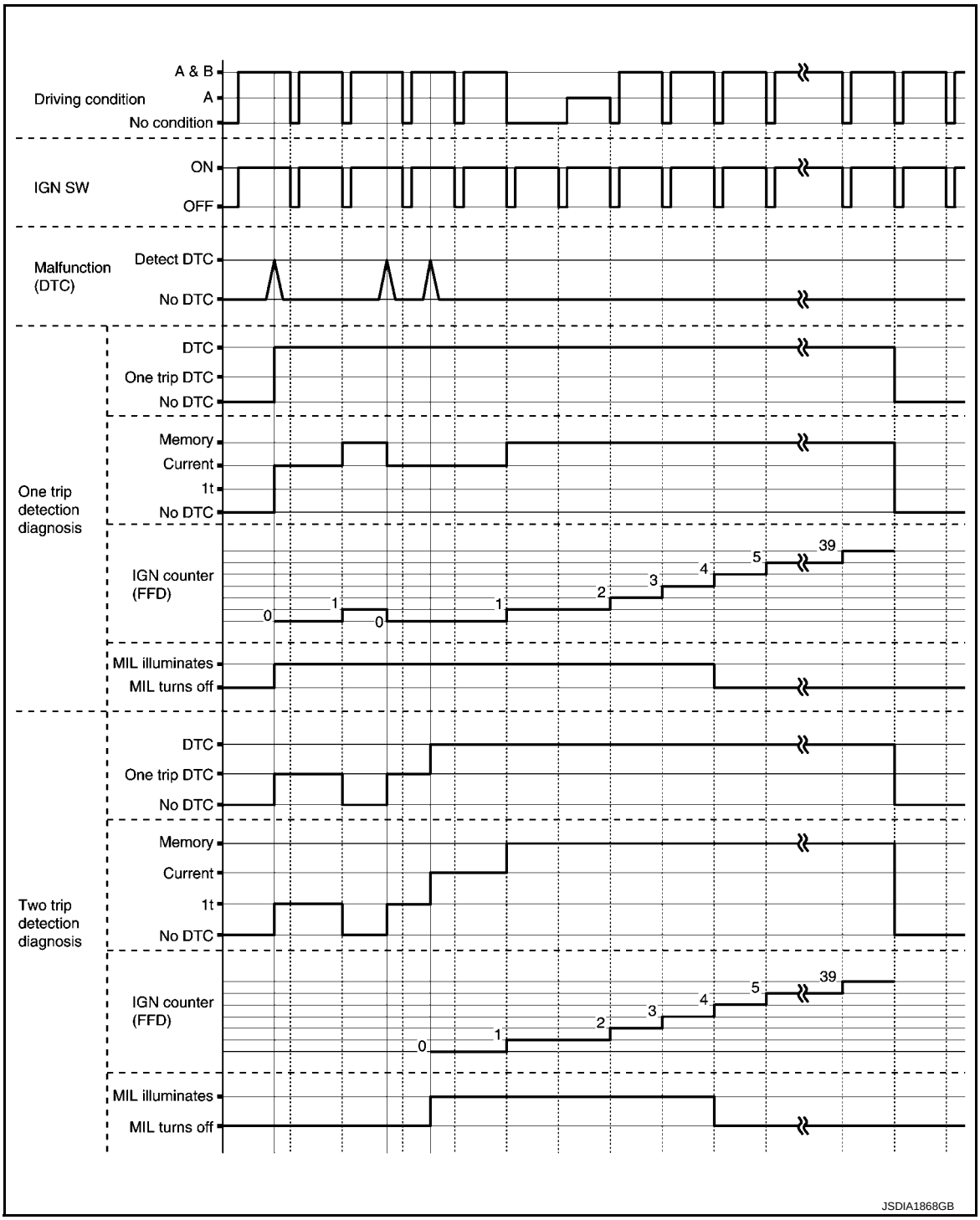

CONSULT Function

INFOID:0000000012404431

CAUTION:

After disconnecting the CONSULT vehicle interface (VI) from the data link connector, the ignition must be cycled OFF → ON (for at least 5 seconds) → OFF. If this step is not performed, the BCM may not go to ”sleep mode”, potentially causing a discharged battery and a no-start condition.

APPLICABLE ITEM

cardiagn.com

Conditions	Function
Work Support	The settings for ECU functions can be changed.
Self Diagnostic Results	The ECU self diagnostic results are displayed.
Data Monitor	The ECU input/output data is displayed in real time.
CAN Diagnosis Support Monitor	The result of transmit/receive diagnosis of CAN communication is displayed.
Active Test	The ECU activates outputs to test components.
ECU Identification	The ECU part number is displayed.
CALIB DATA	The calibration data status of TCM can be checked.

SELF DIAGNOSTIC RESULTS

Display Item List
Refer to TM-59, "DTC Index".

DTC at 1st trip and method to read DTC
- DTC (P0705, P0711, P0720, etc.) is specified by SAE J2012/ISO 15031-6.
- DTC and DTC at 1st trip are displayed on “Self Diagnostic results” of CONSULT.
  When DTC is currently detected, “CRNT” is displayed. If “PAST” is displayed, it shows a malfunction occurred in the past. The trip number of drive without malfunction of concerned DTC can be confirmed with “IGN counter” inside “FFD”.
- When the DTC at the 1st trip is detected, “1t” is displayed.

DTC deletion method
NOTE:
If the ignition switch is left ON after repair, turn OFF the ignition switch and wait for 10 seconds or more. Then, turn the ignition ON again. (Engine stop)
1. Touch “TRANSMISSION” of CONSULT.
2. Touch “Self Diagnostic Result”.
3. Touch “Erase”. (DTC memorized in TCM is erased.)

IGN counter
The ignition counter is displayed in “FFD” and the number of times of satisfied “Driving condition A” is displayed after normal recovery of DTC. Refer to TM-40, "DIAGNOSIS DESCRIPTION : Counter System".
- If malfunction (DTC) is currently detected, “0” is displayed.
- After normal recovery, every time “Driving condition A” is satisfied, the display value increases from 1 → 2 → 3...38 → 39.
- When MIL turns OFF due to the malfunction and the counter reaches 40, the DTC is erased.
  NOTE:
  The counter display of “40” cannot be checked.

DATA MONITOR

NOTE:
The following table includes information (items) inapplicable to this vehicle. For information (items) applicable to this vehicle, refer to CONSULT display items.

×: Application ▼: Optional selection

Monitored item	(Unit)	Remarks
VSP SENSOR	(km/h or mph)	Displays the vehicle speed calculated from the CVT output shaft speed.
ESTM VSP SIG	(km/h or mph)	• Displays the vehicle speed signal (ABS) received through CAN communication. • Models with ABS are displayed.
INPUT SPEED SENSOR	(rpm)	Displays the input speed calculated from the pulse signal of the input speed sensor.
PRI SPEED SEN	(rpm)	Displays the primary pulley speed calculated from the pulse signal of the primary speed sensor.
SEC REV SENSOR	(rpm)	Displays the secondary pulley speed calculated from the pulse signal of the output speed sensor.
ENG SPEED SIG	(rpm)	Displays the engine speed received through CAN communication.
SEC PRESSURE SEN	(V)	Displays the signal voltage of the secondary pressuresensor.

cardiagn.com

Monitored item	(Unit)	Remarks
PRI PRESSURE SEN	(V)	Displays the signal voltage of the primary pressuresensor.
ATF TEMP SEN	(V)	Displays the signal voltage of the CVT fluid temperature sensor.
G SENSOR	(G)	Displays the signal voltage of the G sensor.
VIGN SEN	(V)	Displays the battery voltage applied to TCM.
PVIGN VOLT	(V)	Displays the backup voltage of TCM.
VEHICLE SPEED	(km/h or mph)	Displays the vehicle speed recognized by TCM.
INPUT REV	(rpm)	Displays the input shaft speed of CVT recognized by TCM.
PRI SPEED	(rpm)	Displays the primary pulley speed recognized by TCM.
SEC SPEED	(rpm)	Displays the secondary pulley speed recognized by TCM.
ENG SPEED	(rpm)	Displays the engine speed recognized by TCM.
SLIP REV	(rpm)	Displays the speed difference between the input shaft speed of CVT and the engine speed.
PULLEY GEAR RATIO		Displays the pulley gear ratio calculated from primary pulley speed/secondary pulley speed.
G SPEED	(G)	Displays the acceleration and deceleration speed of the vehicle calculated from vehicle speed change.
ACCEL POSI SEN 1	(deg)	Displays the estimated throttle position received through CAN communication.
VENG TRQ	(Nm)	Display the engine torque recognized by TCM.
PRI TRQ	(Nm)	Display the input shaft torque of CVT.
TRQ RTO		Display the torque ratio of torque converter.
SEC PRESSURE	(MPa)	Displays the secondary pressure calculated from the signal voltage of the secondary pressure sensor.
PRI PRESSURE	(MPa)	Displays the primary pressure calculated from the signal voltage of the primary pressure sensor.
FLUID TEMP	(°C or °F)	Displays the CVT fluid temperature calculated from the signal voltage of the CVT fluid temperature sensor.
DSR REV	(rpm)	Displays the target primary pulley speed calculated from processing of gear shift control.
TGT PLLY GR RATIO		Displays the target gear ratio of the pulley from processing of gear shift control.
LU PRS	(MPa)	Displays the target oil pressure of the torque converter clutch solenoid valve calculated from oil pressure processing of gear shift control.
LINE PRS	(MPa)	Displays the target oil pressure of the line pressure solenoid valve calculated from oil pressure processing of gear shift control.
TRGT PRI PRESSURE	(MPa)	Displays the target oil pressure of the primary pressure solenoid valve calculated from oil pressure processing of gear shift control.
TARGET SELECT PRESSURE	(MPa)	Displays the target oil pressure of the select solenoid valve calculated from oil pressure processing of gear shift control.
TARGET SEC PRESSURE	(MPa)	Displays the target oil pressure of the secondary pressure solenoid valve calculated from oil pressure processing of gear shift control.
ISOLT1	(A)	Displays the command current from TCM to the torque converter clutch solenoid valve.
ISOLT2	(A)	Displays the command current from TCM to the line pressure solenoid valve.
PRI SOLENOID	(A)	Displays the command current from TCM to the primary pressure solenoid valve.
SEC SOLENOID CURRENT	(A)	Displays the command current from TCM to the secondary pressure solenoid valve.
SELECT SOLENOID CURRENT	(A)	Displays the command current from TCM to the select solenoid valve.
SOLMON1	(A)	Monitors the command current from TCM to the torque converter clutch solenoid valve and displays the monitored value.

cardiagn.com

Monitored item	(Unit)	Remarks
SOLMON2	(A)	Monitors the command current from TCM to the line pressure solenoid valve and displays the monitored value.
PRI SOL MON	(A)	Monitors the command current from TCM to the primary pressure solenoid valve and displays the monitored value.
SEC SOL MON CURRENT	(A)	Monitors the command current from TCM to the secondary pressure solenoid valve and displays the monitored value.
SELECT SOL MON CURRENT	(A)	Monitors the command current from TCM to the select solenoid valve and displays the monitored value.
D POSITION SW	(On/Off)	Displays the operation status of the transmission range switch (D position).
N POSITION SW	(On/Off)	Displays the operation status of the transmission range switch (N position).
R POSITION SW	(On/Off)	Displays the operation status of the transmission range switch (R position).
P POSITION SW	(On/Off)	Displays the operation status of the transmission range switch (P position).
L POSITION SW	(On/Off)	Displays the operation status of the transmission range switch (L position).
DS RANGE SW*	(On/Off)	Displays the operation status of the transmission range switch (Ds position).
BRAKESW	(On/Off)	Displays the reception status of the stop lamp switch signal received through CAN communication.
IDLE SW	(On/Off)	Displays the reception status of the closed throttle position signal received through CAN communication.
SPORT MODE SW	(On/Off)	Displays the reception status of the overdrive control switch signal received through CAN communication.
ECO MODE SW*	(On/Off)	Displays the reception status of the ECO mode switch signal received through CAN communication.
STRDWNSW*	(On/Off)	Displays the operation status of the paddle shifter (down switch).
STRUPSW*	(On/Off)	Displays the operation status of the paddle shifter (up switch).
DOWNLVR*	(On/Off)	Displays the operation status of the selector lever (down switch).
UPLVR*	(On/Off)	Displays the operation status of the selector lever (up switch).
NONMMODE*	(On/Off)	Displays if the selector lever position is not at the manual shift gate.
MMODE*	(On/Off)	Displays if the selector lever position is at the manual shift gate.
TOW MODE SW*	(On/Off)	Displays the reception status of the TOW mode switch signal received through CAN communication.
SHIFT IND SIGNAL		Displays the transaxle value of shift position signal transmitted via CAN communication.
CVT LAMP*	(On/Off)	Displays the transaxle status of the CVT warning lamp signal transmitted through CAN communication.
SPORT MODE IND	(On/Off)	Displays the transaxle status of the O/D OFF indicator lamp signal transmitted through CAN communication.
MANU MODE SIGNAL*	(On/Off)	Displays the transaxle status of the manual mode signal transmitted through CAN communication.
DS RANGE SIGNAL*	(On/Off)	Displays the shift position signal status from transmission range switch (DS position).
ECO MODE SIGNAL*	(On/Off)	Displays the transaxle status of the ECO mode signal transmitted through CAN communication.
VDC ON	(On/Off)	Displays the reception status of the VDC operation signal received through CAN communication.
TCS ON	(On/Off)	Displays the reception status of the TCS operation signal received through CAN communication.
ABS FAIL SIGNAL	(On/Off)	Displays the reception status of the ABS malfunction signal received through CAN communication.
ABS ON	(On/Off)	Displays the reception status of the ABS operation signal received through CAN communication.

cardiagn.com

Monitored item	(Unit)	Remarks
RANGE		Displays the gear position recognized by TCM.
M GEAR POS*		Display the target gear of manual mode
G SEN SLOPE	(%)	Displays the gradient angle calculated from the G sensor signal voltage.
G SEN CALIBRATION	(YET/DONE)	Displays the status of “G SENSOR CALIBRATION” in “Work Support”.
N IDLE STATUS*	(On/Off)	Displays idle neutral status.
ENGBRKLVL	(On/Off)	Displays the setting of “ENGINE BRAKE ADJ” in “Work Support”.
DRIVE MODE STATS*		Displays the drive mode status recognized by TCM.
SNOW MODE*	(On/Off)	Displays whether it is the SNOW mode.
ECO MODE*	(On/Off)	Displays whether it is the ECO mode.
NORMAL MODE*	(On/Off)	Displays whether it is the NORMAL mode.
SPORT MODE*	(On/Off)	Displays whether it is the SPORT mode.
AIR BLDING STATE*	(INCOMP/ COMP)	Displays the status of “ELECTRIC O.P. AIR BLEEDING” in “Work Support”.
ELECTRIC OP DUTY*	(%)	Displays the command signal value (duty) of the electric oil pump transmitted from TCM.
E-OP DUTY MON*	(%)	Monitors the status signal value (duty) transmitted from the electric oil pump and displays the monitored value.
ELECTRIC OP RELAY*	(On/Off)	Displays the command status from TCM to the electric oil pump relay.
E-OP RELAY MON*	(On/Off)	Monitors the command status from TCM to the oil pump relay and displays the monitored value.
CVT-B		• Displays CVT fluid temperature count. • This monitor item does not use.
CVT-A		• Displays CVT fluid temperature count. • This monitor item does not use.
G SENSOR	(V)	Displays the signal voltage of the G sensor.

*: Not applicable but displayed.

WORK SUPPORT

Item name	Description
CONFORM CVTF DETERIORTN	Checks the degradation level of the CVT fluid under severe conditions.
ERASE MEMORY DATA	Performs “erasing of the calibration data” and “erasing of the learned value” at the same time.
G SENSOR CALIBRATION	Compensates the G sensor.
ERASE LEARNING VALUE	Erases learning value memorized by TCM.
ENGINE BRAKE ADJ.	Although there is no malfunction on the transaxle and the CVT system, if a customer make a complaint like “I do not feel comfortable with automatic operation of the engine brake on downhill”, the engine brake may be cancelled with “engine brake adjustment”.
ERASE CALIBRATION DATA	Erases calibration data memorized by TCM.
WRITE IP CHARA - REPLACEMENT AT/CVT	Writes IP characteristics when transaxle assembly is replaced.
READ IP CHARA - REPLACEMENT TCM	Reads IP characteristics when TCM is replaced.
WRITE IP CHARA - REPLACEMENT TCM	Writes IP characteristics when TCM is replaced.

Engine brake adjustment

ENGINE BRAKE LEVEL

ON : Turn ON the engine brake control.

OFF : Turn OFF the engine brake control.

Check the degradation level of the CVT fluid.

cardiagn.com

CVTF degradation level data

210,000 or more : Replacement of the CVT fluid is required.

Less than 210,000 : Replacement of the CVT fluid is not required.

ACTIVE TEST

Item name	Description
CVT OIL COOLER FAN CIRCUIT	Checks the operation of CVT oil cooler fan relay.

cardiagn.com

ECU DIAGNOSIS INFORMATION

TCM

Reference Value

INFOID:0000000012404432

CONSULT DATA MONITOR STANDARD VALUE

- In CONSULT, electric shift timing or lock-up timing, i.e. operation timing of each solenoid valve, is displayed. Therefore, if there is an obvious difference between the shift timing estimated from a shift shock (or engine speed variations) and that shown on the CONSULT, the mechanism parts (including the hydraulic circuit) excluding the solenoids and sensors may be malfunctioning. In this case, check the mechanical parts following the appropriate diagnosis procedure.
- Shift point (gear position) displayed on CONSULT slightly differs from shift pattern described in Service Manual. This is due to the following reasons.

- Actual shift pattern may vary slightly within specified tolerances.
- While shift pattern described in Service Manual indicates start of each shift, CONSULT shows gear position at end of shift.
- The solenoid display (ON/OFF) on CONSULT is changed at the start of gear shifting. In contrast, the gear position display is changed at the time when gear shifting calculated in the control unit is completed.

NOTE:
The following table includes information (items) inapplicable to this vehicle. For information (items) applicable to this vehicle, refer to CONSULT display items.

Monitor item	Condition	Value/Status (Approx.)
VSP SENSOR	While driving	Almost same as the speedometer display.
ESTM VSP SIG	While driving	Almost same as the speedometer display.
INPUT SPEED SENSOR	In driving (lock-up ON)	Approximately matches the engine speed.
PRI SPEED SEN	In driving (lock-up ON)	Approximately matches the engine speed.
SEC REV SENSOR	While driving	VSP SENSOR × 40
ENG SPEED SIG	Engine running	Almost same reading as tachometer
SEC PRESSURE SEN	• After engine warm up • Selector lever: “N” position • At idle	1.7 – 1.8 V
PRI PRESSURE SEN	• After engine warm up • Selector lever: “N” position • At idle	1.32 – 1.34 V
ATF TEMP SEN	CVT fluid: Approx. 20°C (68°F)	2.01 – 2.05 V
	CVT fluid: Approx. 50°C (122°F)	1.45 – 1.50 V
	CVT fluid: Approx. 80°C (176°F)	0.90 – 0.94 V
G SENSOR	• Vehicle stopped • Vehicle is level	0 G
	During acceleration	The value changes to the positive side along with acceleration.
	During deceleration	The value changes to the positive side along with deceleration.
VIGN SEN	Ignition switch: ON	10 – 16 V
PVIGN VOLT	Ignition switch: ON	10 – 16 V
VEHICLE SPEED	While driving	Almost same as the speedometer display.
INPUT REV	In driving (lock-up ON)	Almost same as the engine speed.
PRI SPEED	In driving (lock-up ON)	Approximately matches the engine speed.
SEC SPEED	While driving	VSP SENSOR × 40
ENG SPEED	Engine running	Almost same reading as tachometer
SLIP REV	While driving	Engine speed – Input speed

cardiagn.com

Monitor item	Condition	Value/Status (Approx.)
PULLEY GEAR RATIO	In driving (forward)	2.70 – 0.38
	In driving (reverse)	2.70
G SPEED	Vehicle stopped	0.00 G
	During acceleration	The value changes to the positive side along with acceleration.
	During deceleration	The value changes to the positive side along with deceleration.
ACCEL POSI SEN 1	Accelerator pedal released	0.00 deg
	Accelerator pedal fully depressed	80.00 deg
VENG TRQ	While driving	The value changes along with acceleration/ deceleration.
PRI TRQ	While driving	The value changes along with acceleration/ deceleration.
TRQ RTO	While driving	The value changes along with acceleration/ deceleration.
SEC PRESSURE	• After engine warm up • Selector lever: “N” position • At idle	1.8 MPa
PRI PRESSURE	• After engine warm up • Selector lever: “N” position • At idle	1.2 MPa
FLUID TEMP	Ignition switch ON.	Displays the CVT fluid temperature.
DSR REV	While driving	It varies along with the driving condition.
TGT PLLY GR RATIO	In driving (forward)	2.70 – 0.38
	In driving (reverse)	2.70
LU PRS	• Engine started • Vehicle is stopped.	–0.500 MPa
	• Selector lever: “D” position • Accelerator pedal position: 1/8 or less • Vehicle speed: 20 km/h (12 MPH) or more	0.650 MPa
LINE PRS	• After engine warm up • Selector lever: “N” position • At idle	1.8 MPa
TRGT PRI PRESSURE	• After engine warm up • Selector lever: “N” position • At idle	1.2 MPa
TARGET SELECT PRESSURE	• After engine warm up • Selector lever: “N” position • At idle	0 MPa
	• Selector lever: “D” position • At idle	0.3 – 0.5 MPa
TARGET SEC PRESSURE	• After engine warm up • Selector lever: “N” position • At idle	1.8 MPa
ISOLT1*	—	—
ISOLT2*	—	—
PRI SOLENOID*	—	—
SEC SOLENOID CURRENT*	—	—
SELECT SOLENOID CURRENT*	—	—
SOLMON1*	—	—

cardiagn.com

Monitor item	Condition	Value/Status (Approx.)
SOLMON2*	—	—
PRI SOL MON*	—	—
SEC SOL MON CURRENT*	—	—
SELECT SOL MON CURRENT*	—	—
D POSITION SW	Selector lever: “D” position	On
	Other than the above	Off
N POSITION SW	Selector lever: “N” position	On
	Other than the above	Off
R POSITION SW	Selector lever: “R” position	On
	Other than the above	Off
P POSITION SW	Selector lever: “P” position	On
	Other than the above	Off
L POSITION SW	Selector lever: “L” position	On
	Other than the above	Off
DS RANGE SW	Always	Off
BRAKESW	Brake pedal is depressed	On
	Brake pedal is released	Off
IDLE SW	Accelerator pedal is fully depressed	On
	Accelerator pedal is released	Off
SPORT MODE SW	Press the overdrive control switch	On
	Release the overdrive control switch	Off
ECO MODE SW	Always	Off
STRDWNSW	Always	Off
STRUPSW	Always	Off
DOWNLVR	Always	Off
UPLVR	Always	Off
NONMMODE	Always	On
MMODE	Always	Off
TOW MODE SW	Always	Off
SHIFT IND SIGNAL	When the selector lever is positioned in between each position.	OFF
	Selector lever: P position	P
	Selector lever: R position	R
	Selector lever: N position	N
	Selector lever: D position	D
	Selector lever: L position	L
CVT LAMP	Approx. 2 seconds after ignition switch ON	On
	Other than the above	Off
SPORT MODE IND	In overdrive off	On
	Other than the above	Off
MANU MODE SIGNAL	Always	Off
DS RANGE SIGNAL	Always	Off
ECO MODE SIGNAL	Always	Off
VDC ON	When VDC malfunction signal is received	On
	Other than the above	Off

cardiagn.com

Monitor item	Condition	Value/Status (Approx.)
TCS ON	When TCS malfunction signal is received	On
	Other than the above	Off
ABS FAIL SIGNAL	When ABS malfunction signal is received	On
	Other than the above	Off
ABS ON	ABS is activated	On
	Other than the above	Off
RANGE	Selector lever: P and N positions	N/P
	Selector lever: R position	R
	Selector lever: D position	D
	Selector lever: D position (in O/D OFF)	S
	Selector lever: L position	L
M GEAR POS	Always	1
G SEN SLOPE	Flat road	0%
	Uphill gradient	The value changes to the positive side along with uphill gradient. (Maximum 40.45%)
	Downhill gradient	The value changes to the negative side along with downhill gradient. (Minimum –40.45%)
G SEN CALIBRATION	When G sensor calibration is completed	DONE
	When G sensor calibration is not completed	YET
N IDLE STATUS	Always	Off
ENGBRKLVL	When the engine brake level of “ENGINE BRAKE ADJ”. in “Work Support” is ON	On
	When the engine brake level of “ENGINE BRAKE ADJ”. in “Work Support” is OFF	Off
DRIVE MODE STATS	While driving in D position	AUTO
SNOW MODE	Always	Off
ECO MODE	Always	Off
NORMAL MODE	Always	Off
SPORT MODE	Always	Off
AIR BLDING STATE	Always	INCOMP
ELECTRIC OP DUTY	Always	0%
E-OP DUTY MON	Always	0%
ELECTRIC OP RELAY	Always	Off
E-OP RELAY MON	Always	Off
CVT-B*	—	—
CVT-A*	—	—
G SENSOR	• Vehicle stopped • Vehicle is level	2.5 V
	During acceleration	Positive value
	During deceleration	Negative value

*: These monitor items do not use.

TERMINAL LAYOUT

cardiagn.com

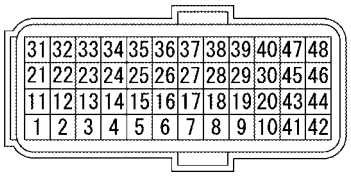

INPUT/OUTPUT SIGNAL STANDARD

Terminal No. (Wire color)		Description		Condition		Value (Approx.)
+	–	Signal	Input/ Output			
2 (GR)	Ground	L position switch	Input	Ignition switch ON	Selector lever: “L” position	10 – 16 V
					Other than the above	0 V
4 (G/O)	Ground	D position switch	Input		Selector lever: “D” position	10 – 16 V
					Other than the above	0 V
5 (P/L)	Ground	N position switch	Input		Selector lever: “N” position	10 – 16 V
					Other than the above	0 V
6 (P/B)	Ground	R position switch	Input		Selector lever: “R” position	10 – 16 V
					Other than the above	0 V
7 (BR/W)	Ground	P position switch	Input		Selector lever: “P” position	10 – 16 V
					Other than the above	0 V
11 (W/R)	Ground	Sensor ground	Input	Always		0 V
12 (V)	Ground	CVT fluid temperature sensor	Intput	Ignition switch ON	CVT fluid: Approx. 20°C (68°F)	2.01 – 2.05 V
					CVT fluid: Approx. 50°C (122°F)	1.45 – 1.50 V
					CVT fluid: Approx. 80°C 176°F)	0.90 – 0.94 V
14 (W)	Ground	G sensor	Input	Ignition switch ON	• Vehicle stopped • Vehicle is level	2.5 V
16 (V/W)	Ground	Secondary pressure sensor	Input	• After engine warm up • Selector lever: “N” position • At idle		1.7 – 1.8 V
17 (LG)	Ground	Primary pressure sensor	Input	• After engine warm up • Selector lever: “N” position • At idle		1.32 – 1.34 V
23 (P)	—	CAN-L	Input/ Output	—		—
24 (BR)	Ground	Input speed sensor	Input	• Selector lever: “L” position • Vehicle speed: 20 km/h (12 MPH)		880 Hz 1mSec/div 5V/div JSDIA3769GB

cardiagn.com

Terminal No. (Wire color)		Description		Condition	Value (Approx.)
+	–	Signal	Input/ Output		
26 (L/O)	Ground	Sensor power supply	Output	Ignition switch: ON	5.0 V
				Ignition switch: OFF	0 V
30 (R/Y)	Ground	Line pressure solenoid valve	Output	• After engine warming up • Selector lever: “N” position • At idle	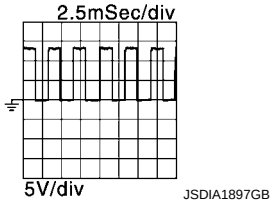
				• After engine warming up • Selector lever: “N” position • Depress the accelerator pedal fully	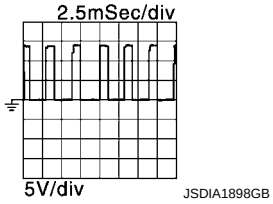
33 (L)	—	CAN-H	Input/ Output	—	—
34 (LG/R)	Ground	Output speed sensor	Input	• Selector lever: “L” position • Vehicle speed: 20 km/h (12 MPH)	200 Hz 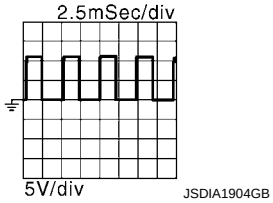
35 (LG)	Ground	Primary speed sensor	Input	• Selector lever: “L” position • Vehicle speed: 20 km/h (12 MPH)	700 Hz 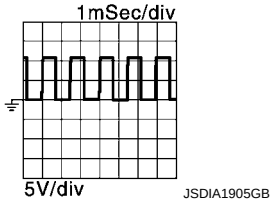
37 (L/W)	Ground	Select solenoid valve	Output	• Engine started • Vehicle is stopped • Selector lever: “N” position	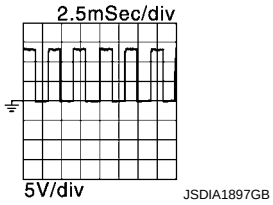

cardiagn.com

Terminal No. (Wire color)		Description		Condition	Value (Approx.)
+	–	Signal	Input/ Output		
38 (V/R)	Ground	Torque converter clutch solenoid valve	Output	• Selector lever: “D” position • Accelerator pedal position: 1/8 or less • Vehicle speed: 20 km/h (12 MPH) or more	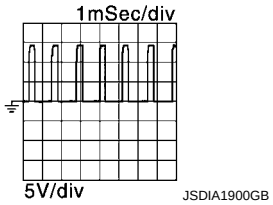
				• Engine started • Vehicle is stopped	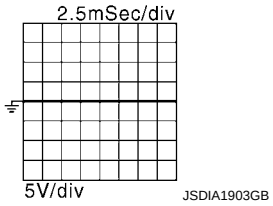
39 (W/B)	Ground	Secondary pressure solenoid valve	Output	• Selector lever: “L” position • Vehicle speed: 20 km/h (12 MPH)	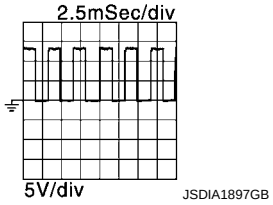
40 (B/R)	Ground	Primary pressure solenoid valve	Output	• Selector lever: “L” position • Vehicle speed: 20 km/h (12 MPH)	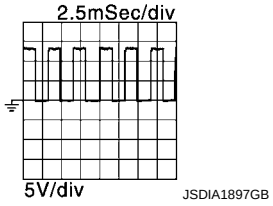
41 (B)	Ground	Ground	Output	Always	0 V
42 (B)	Ground	Ground	Output	Always	0 V
45 (LG)	Ground	Battery power supply (backup)	Input	Always	10 – 16 V
46 (LG)	Ground	Battery power supply (backup)	Input	Always	10 – 16 V
47 (Y)	Ground	Ignition power supply	Input	Ignition switch: ON	10 – 16 V
				Ignition switch: OFF	0 V
48 (Y)	Ground	Ignition power supply	Input	Ignition switch: ON	10 – 16 V
				Ignition switch: OFF	0 V

Fail-safe

INFOID:0000000012404433

TCM has a fail-safe mode. The mode functions so that operation can be continued even if the signal circuit of the main electronically controlled input/output parts is damaged.
If the vehicle shows following behaviors including “poor acceleration”, a malfunction of the applicable system is detected by TCM and the vehicle may be in a fail-safe mode. At this time, check the DTC code and perform inspection and repair according to the malfunction diagnosis procedures.

Fail-safe function

cardiagn.com

DTC	Vehicle behavior	Conditions of vehicle
P062F	Not changed from normal driving	—
P0705	• Shift position indicator on combination meter is not displayed • Selector shock is large • Start is slow • Acceleration is slow • Lock-up is not performed	—
P0706	• Shift position indicator on combination meter is not displayed • Selector shock is large • Start is slow • Acceleration is slow • Lock-up is not performed	—
P0711	• Start is slow • Acceleration is slow	Engine coolant temperature when engine start: Temp. ≥ 10°C (50°F)
	• Selector shock is large • Start is slow • Acceleration is slow	Engine coolant temperature when engine start: –35°C (–31°F) ≤ Temp. < 10°C (50°F)
	• Selector shock is large • Start is slow • Acceleration is slow	Engine coolant temperature when engine star: Temp. < –35°C (–31°F)
P0712	• Start is slow • Acceleration is slow	Engine coolant temperature when engine start: Temp. ≥ 10°C (50°F)
	• Selector shock is large • Start is slow • Acceleration is slow	Engine coolant temperature when engine start: –35°C (–31°F) ≤ Temp. < 10°C (50°F)
	• Selector shock is large • Start is slow • Acceleration is slow	Engine coolant temperature when engine star: Temp. < –35°C (–31°F)
P0713	• Start is slow • Acceleration is slow	Engine coolant temperature when engine start: Temp. ≥ 10°C (50°F)
	• Selector shock is large • Start is slow • Acceleration is slow	Engine coolant temperature when engine start: –35°C (–31°F) ≤ Temp. < 10°C (50°F)
	• Selector shock is large • Start is slow • Acceleration is slow	Engine coolant temperature when engine star: Temp. < –35°C (–31°F)
P0715	• Start is slow • Acceleration is slow • Lock-up is not performed	—
P0717	• Start is slow • Acceleration is slow • Lock-up is not performed	—
P0740	• Start is slow • Acceleration is slow • Lock-up is not performed	—
P0743	• Start is slow • Acceleration is slow • Lock-up is not performed	—
P0744	• Start is slow • Acceleration is slow • Lock-up is not performed	—
P0746	• Selector shock is large • Start is slow • Acceleration is slow • Lock-up is not performed	—

cardiagn.com

DTC	Vehicle behavior	Conditions of vehicle
P0776	• Selector shock is large • Start is slow • Acceleration is slow • Lock-up is not performed • Vehicle speed is not increased	When a malfunction occurs on the low oil pressure side
	• Selector shock is large • Start is slow • Acceleration is slow • Lock-up is not performed	When a malfunction occurs on the high oil pressure side
P0778	• Selector shock is large • Start is slow • Acceleration is slow • Lock-up is not performed	—
P0779	• Selector shock is large • Start is slow • Acceleration is slow • Lock-up is not performed	—
P0841	Not changed from normal driving	—
P0847	Not changed from normal driving	—
P0848	Not changed from normal driving	—
P084C	Not changed from normal driving	—
P084D	Not changed from normal driving	—
P0863	• Selector shock is large • Start is slow • Acceleration is slow • Lock-up is not performed	—
P0890	• Selector shock is large • Start is slow • Acceleration is slow • Lock-up is not performed • Vehicle speed is not increased	—
P0962	• Selector shock is large • Start is slow • Acceleration is slow • Lock-up is not performed	—
P0963	• Selector shock is large • Start is slow • Acceleration is slow • Lock-up is not performed	—
P0965	• Selector shock is large • Start is slow • Acceleration is slow • Lock-up is not performed	When a malfunction occurs on the low oil pressure side
	• Selector shock is large • Lock-up is not performed	When a malfunction occurs on the high oil pressure side
P0966	• Selector shock is large • Start is slow • Acceleration is slow • Lock-up is not performed	—
P0967	• Selector shock is large • Start is slow • Acceleration is slow • Lock-up is not performed	—
P1586	—	—
P1588	—	—

cardiagn.com

DTC	Vehicle behavior	Conditions of vehicle
P2765	• Start is slow • Acceleration is slow • Lock-up is not performed	—
P2813	• Selector shock is large • Start is slow • Acceleration is slow • Vehicle speed is not increased	When a malfunction occurs on the low oil pressure side
	• Selector shock is large	When a malfunction occurs on the high oil pressure side
P2814	• Selector shock is large	—
P2815	• Selector shock is large	—
U0073	• Selector shock is large • Start is slow • Acceleration is slow • Lock-up is not performed	—
U0100	• Selector shock is large • Start is slow • Acceleration is slow • Lock-up is not performed	—
U0140	• Not changed from normal driving	—
U0141	• Not changed from normal driving	—
U0155	• Not changed from normal driving	—
U0300	• Selector shock is large • Start is slow • Acceleration is slow • Lock-up is not performed	—
U1000	• Not changed from normal driving	—
U1117	• Not changed from normal driving	—

Protection Control

INFOID:0000000012404434

The TCM becomes the protection control status temporarily to protect the safety when the safety of TCM and transmission is lost. It automatically returns to the normal status if the safety is secured.
The TCM has the following protection control.

CONTROL FOR WHEEL SPIN

Control	When a wheel spin is detected, the engine output and gear ratio are limited and the line pressure is increased. Limits engine output when a wheel spin occurs in any of right and left drive wheels.
Vehicle behavior in control	If the accelerator is kept depressing during wheel spin, the engine revolution and vehicle speed are limited to a certain degree.
Normal return condition	Wheel spin convergence returns the control to the normal control.

TORQUE IS REDUCED WHEN DRIVING WITH THE REVERSE GEAR

Control	Engine output is controlled according to a vehicle speed while reversing the vehicle.
Vehicle behavior in control	Power performance may be lowered while reversing the vehicle.
Normal return condition	Torque returns to normal by positioning the selector lever in a range other than “R” position.

CONTROL WHEN FLUID TEMPERATURE IS HIGH

cardiagn.com

Control	When the CVT fluid temperature is high, the gear shift permission maximum revolution and the maximum torque are reduced than usual to prevent increase of the oil temperature.
Vehicle behavior in control	Power performance may be lowered, compared to normal control.
Normal return condition	The control returns to the normal control when CVT fluid temperature is lowered.

REVERSE PROHIBIT CONTROL

Control	The reverse brake is controlled to avoid becoming engaged when the selector lever is set in “R” position while driving in forward direction at more than the specified speed.
Vehicle behavior in control	If the selector lever is put at “R” position when driving with the forward gear, the gear becomes neutral, not reverse.
Normal return condition	The control returns to normal control when the vehicle is driven at low speeds. (The reverse brake becomes engaged.)

DTC Inspection Priority Chart

INFOID:0000000012404435

If multiple malfunction codes are detected at the same time, check each code according to the DTC check priority list below.

Priority	DTC (Diagnostic Trouble Code)	Reference
1	P0863 CONTROL UNIT (CAN)	TM-141, "DTC Logic"
	U0073 COMM BUS A OFF	TM-85, "DTC Logic"
	U0100 LOST COMM (ECM A)	TM-86, "DTC Logic"
	U0140 LOST COMM (BCM)	TM-87, "DTC Logic"
	U0141 LOST COMM (BCM A)	TM-88, "DTC Logic"
	U0155 LOST COMM (IPC)	TM-89, "DTC Logic"
	U0300 CAN COMM DATA	TM-90, "DTC Logic"
	U1000 CAN COMM CIRC	TM-91, "DTC Logic"
	U1117 LOST COMM (ABS)	TM-92, "DTC Logic"
2	P0740 TORQUE CONVERTER	TM-118, "DTC Logic"
	P0743 TORQUE CONVERTER	TM-120, "DTC Logic"
	P0778 PC SOLENOID B	TM-128, "DTC Logic"
	P0779 PC SOLENOID B	TM-130, "DTC Logic"
	P0962 PC SOLENOID A	TM-143, "DTC Logic"
	P0963 PC SOLENOID A	TM-145, "DTC Logic"
	P0966 PC SOLENOID B	TM-149, "DTC Logic"
	P0967 PC SOLENOID B	TM-151, "DTC Logic"
	P2814 SELECT SOLENOID	TM-163, "DTC Logic"
	P2815 SELECT SOLENOID	TM-165, "DTC Logic"

cardiagn.com

Priority	DTC (Diagnostic Trouble Code)	Reference
3	P062F EEPROM	TM-93, "DTC Logic"
	P0705 T/M RANGE SENSOR A	TM-94, "DTC Logic"
	P0706 T/M RANGE SENSOR A	TM-100, "DTC Logic"
	P0711 FLUID TEMP SENSOR A	TM-103, "DTC Logic"
	P0712 FLUID TEMP SENSOR A	TM-108, "DTC Logic"
	P0713 FLUID TEMP SENSOR A	TM-110, "DTC Logic"
	P0715 INPUT SPEED SENSOR A	TM-112, "DTC Logic"
	P0717 INPUT SPEED SENSOR A	TM-115, "DTC Logic"
	P0841 FLUID PRESS SEN/SW A	TM-132, "DTC Logic"
	P0847 FLUID PRESS SEN/SW B	TM-133, "DTC Logic"
	P0848 FLUID PRESS SEN/SW B	TM-135, "DTC Logic"
	P084C FLUID PRESS SEN/SW H	TM-137, "DTC Logic"
	P084D FLUID PRESS SEN/SW H	TM-139, "DTC Logic"
	P0890 TCM	TM-142, "DTC Logic"
	P1586 G SENSOR	TM-153, "DTC Logic"
	P1588 G SENSOR	TM-156, "DTC Logic"
	P2765 INPUT SPEED SENSOR B	TM-158, "DTC Logic"
4	P0744 TORQUE CONVERTER	TM-122, "DTC Logic"
	P0746 PC SOLENOID A	TM-124, "DTC Logic"
	P0776 PC SOLENOID B	TM-126, "DTC Logic"
	P0965 PC SOLENOID B	TM-147, "DTC Logic"
	P2813 SELECT SOLENOID	TM-161, "DTC Logic"

DTC Index

INFOID:0000000012404436

NOTE:
- If multiple malfunction codes are detected at the same time, check each code according to the “DTC check priority list”. Refer to TM-58, "DTC Inspection Priority Chart".
- The ignition counter is displayed in “FFD”. Refer to TM-42, "CONSULT Function".

DTC*1, *2		Items (CONSULT screen terms)	Trip	MIL*3	Perma-nent DTC group*4	Reference
GST	CONSULT (TRANSMISSION)					
P062F	P062F	EEPROM	1	ON	B	TM-93
P0705	P0705	T/M RANGE SENSOR A	2	ON	B	TM-94
P0706	P0706	T/M RANGE SENSOR A	2	ON	B	TM-100
P0711	P0711	FLUID TEMP SENSOR A	2	ON	A	TM-103
P0712	P0712	FLUID TEMP SENSOR A	2	ON	B	TM-108
P0713	P0713	FLUID TEMP SENSOR A	2	ON	B	TM-110
P0715	P0715	INPUT SPEED SENSOR A	2	ON	B	TM-112
P0717	P0717	INPUT SPEED SENSOR A	2	ON	B	TM-115
P0740	P0740	TORQUE CONVERTER	2	ON	B	TM-118
P0743	P0743	TORQUE CONVERTER	2	ON	B	TM-120
P0744	P0744	TORQUE CONVERTER	2	ON	B	TM-122
P0746	P0746	PC SOLENOID A	2	ON	B	TM-124
P0776	P0776	PC SOLENOID B	2	ON	B	TM-126
P0778	P0778	PC SOLENOID B	2	ON	B	TM-128

cardiagn.com

DTC*1, *2		Items (CONSULT screen terms)	Trip	MIL*3	Perma-nent DTC group*4	Reference
GST	CONSULT (TRANSMISSION)					
P0779	P0779	PC SOLENOID B	2	ON	B	TM-130
P0841	P0841	FLUID PRESS SEN/SW A	2	ON	B	TM-132
P0847	P0847	FLUID PRESS SEN/SW B	2	ON	B	TM-133
P0848	P0848	FLUID PRESS SEN/SW B	2	ON	B	TM-135
P084C	P084C	FLUID PRESS SEN/SW H	2	ON	B	TM-137
P084D	P084D	FLUID PRESS SEN/SW H	2	ON	B	TM-139
P0863	P0863	CONTROL UNIT (CAN)	1	ON	B	TM-141
P0890	P0890	TCM	1	ON	B	TM-142
P0962	P0962	PC SOLENOID A	2	ON	B	TM-143
P0963	P0963	PC SOLENOID A	2	ON	B	TM-145
P0965	P0965	PC SOLENOID B	2	ON	B	TM-147
P0966	P0966	PC SOLENOID B	2	ON	B	TM-149
P0967	P0967	PC SOLENOID B	2	ON	B	TM-151
—	P1586	G SENSOR	1	—	—	TM-153
—	P1588	G SENSOR	1	—	—	TM-156
P2765	P2765	INPUT SPEED SENSOR B	2	ON	B	TM-158
P2813	P2813	SELECT SOLENOID	2	ON	B	TM-161
P2814	P2814	SELECT SOLENOID	2	ON	B	TM-163
P2815	P2815	SELECT SOLENOID	2	ON	B	TM-165
U0073	U0073	COMM BUS A OFF	1	ON	B	TM-85
U0100	U0100	LOST COMM (ECM A)	1	ON	B	TM-86
—	U0140	LOST COMM (BCM)	1	—	—	TM-87
—	U0141	LOST COMM (BCM A)	1	—	—	TM-88
—	U0155	LOST COMM (IPC)	1	—	—	TM-89
—	U0300	CAN COMM DATA	1	—	—	TM-90
—	U1000	CAN COMM CIRC	1	—	—	TM-91
—	U1117	LOST COMM (ABS)	1	—	—	TM-92

*1: These numbers are specified by SAE J2012/ISO 15031-6.
*2: The DTC number of the 1st trip is the same as the DTC number.
*3: Refer to TM-40, "DIAGNOSIS DESCRIPTION : Malfunction Indicator Lamp (MIL)".
*4: Refer to TM-84, "Description".

cardiagn.com

WIRING DIAGRAM

CVT CONTROL SYSTEM

Wiring diagram

INFOID:0000000012404437

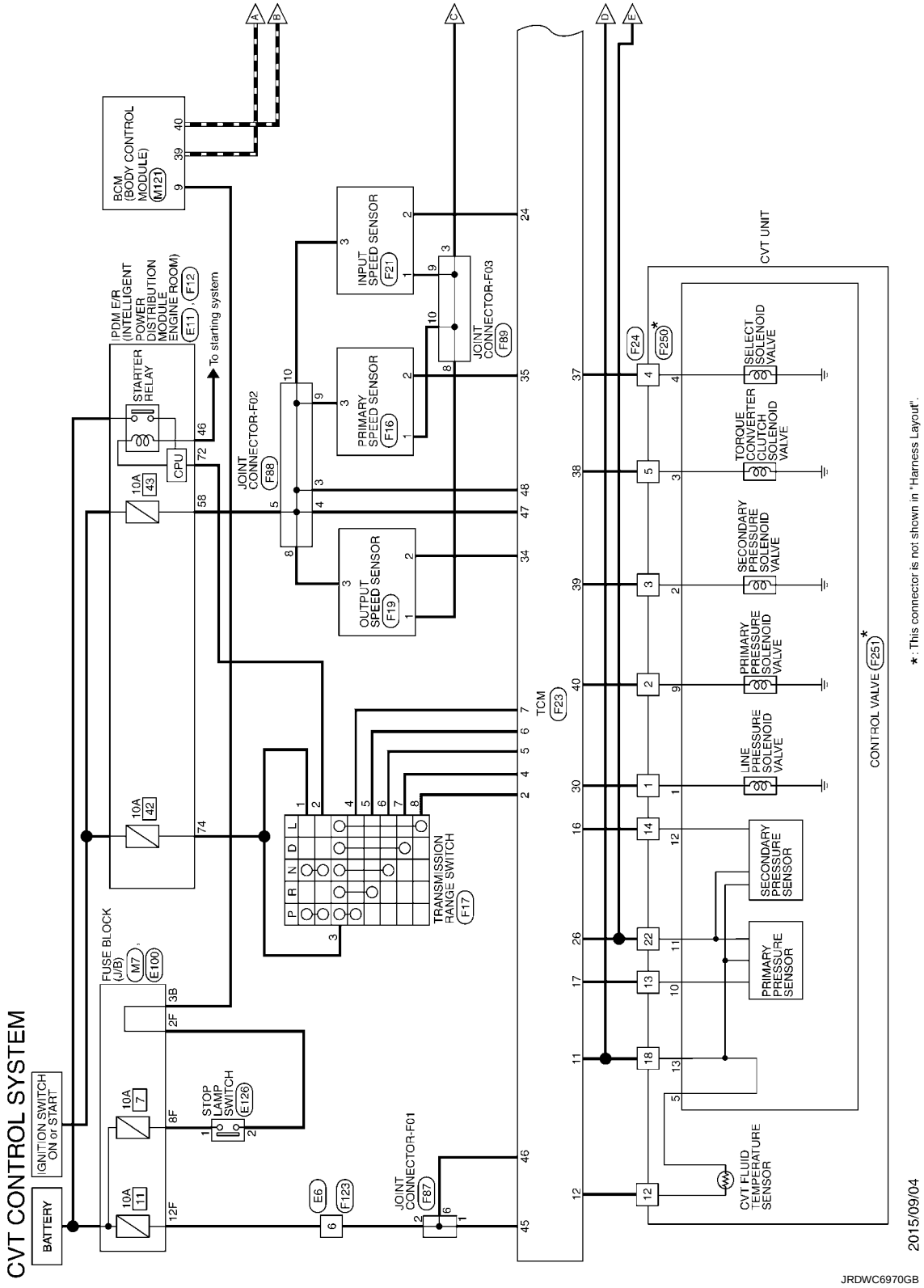

cardiagn.com

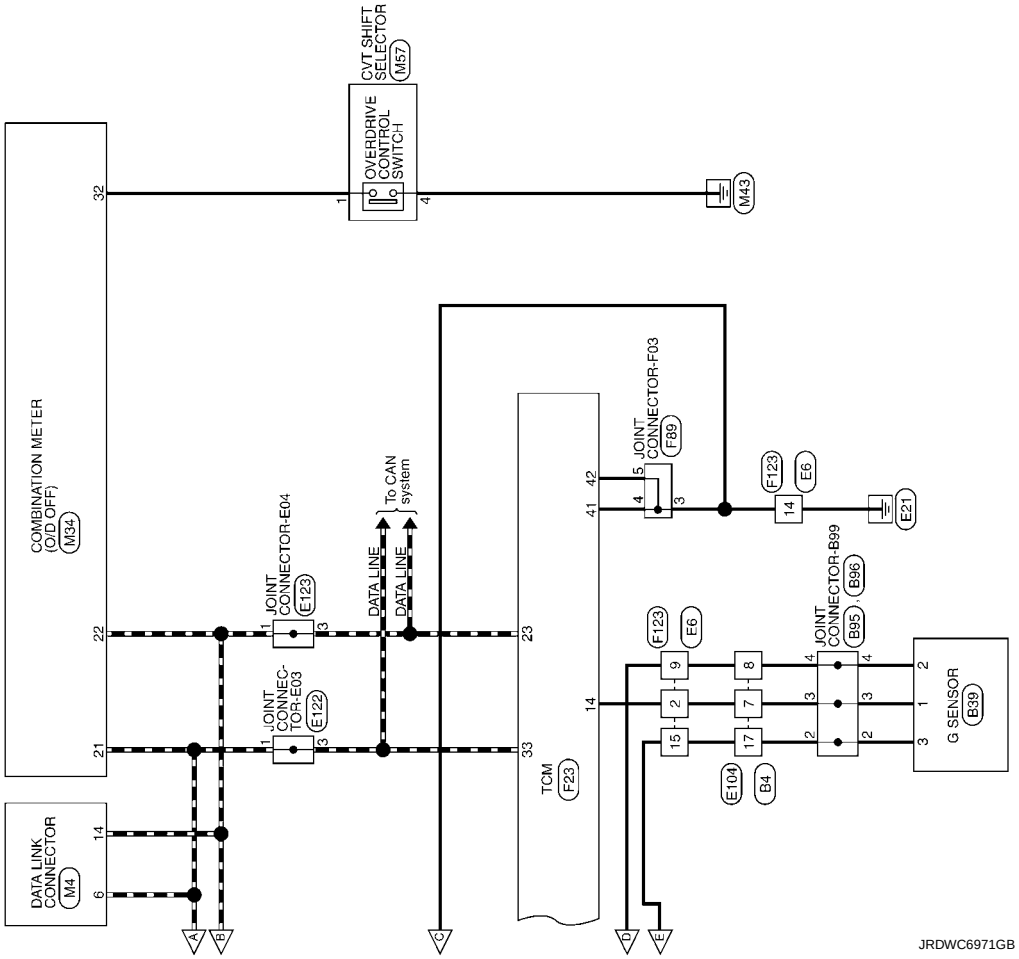

cardiagn.com

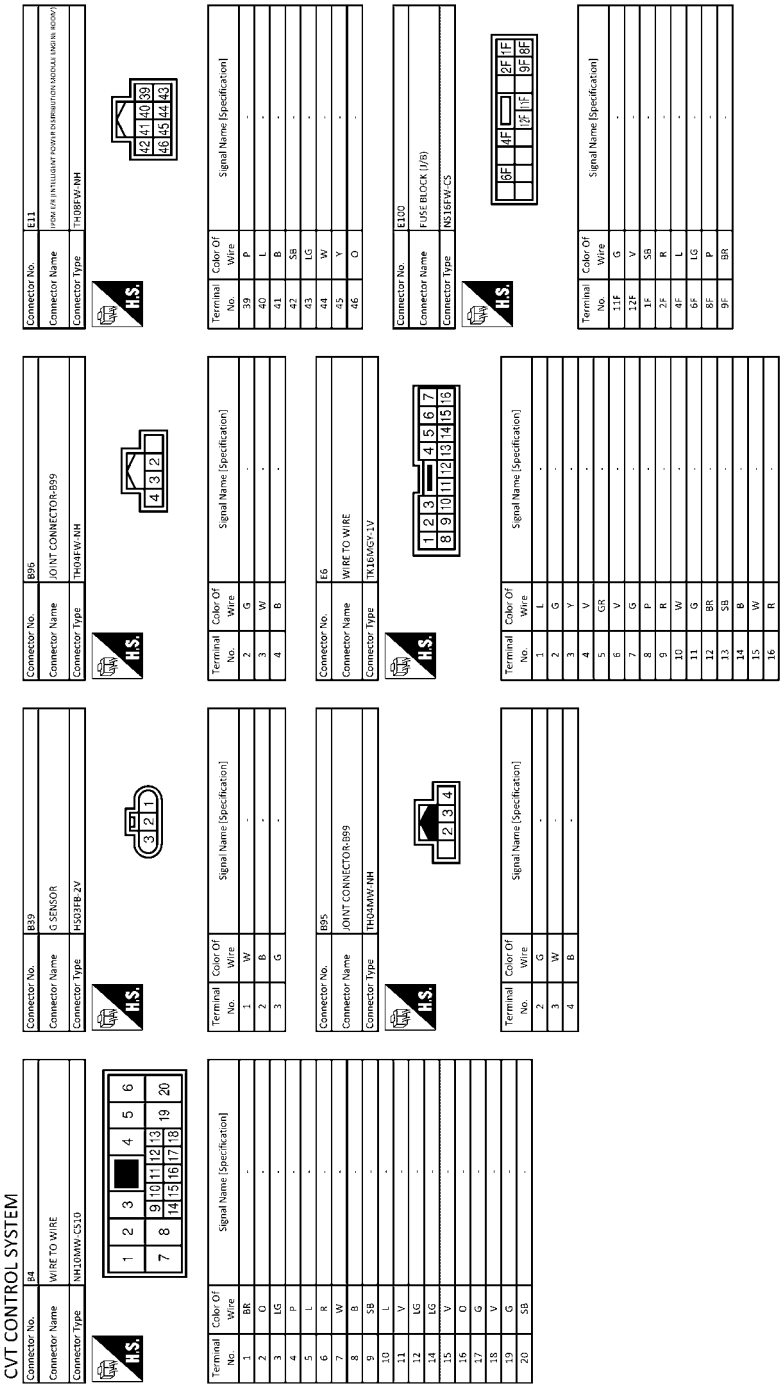

JRDWC6972GB

cardiagn.com

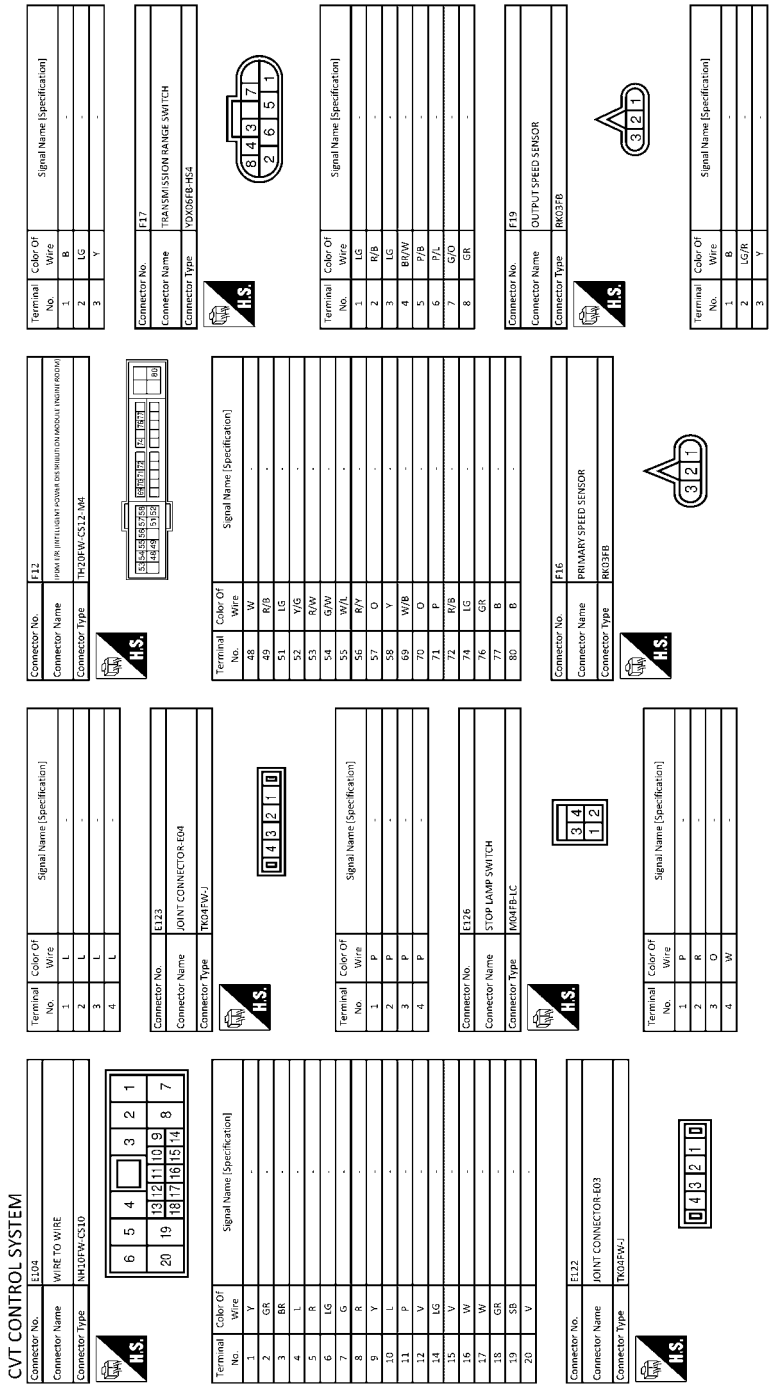

JRDWC6973GB

cardiagn.com

CVT CONTROL SYSTEM

Connector No.	F21
Connector Name	INPUT SPEED SENSOR
Connector Type	RK03FB

H.S.

Terminal No.	Color Of Wire	Signal Name [Specification]
1	B	-
2	BR	-
3	Y	-

Connector No.	F23
Connector Name	TCM
Connector Type	RH40FB-RZ8-L-RH

H.S.

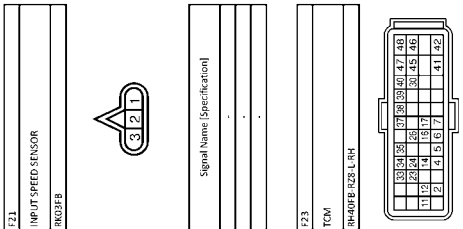

Terminal No.	Color Of Wire	Signal Name [Specification]
2	GR	L_RANGE_SW
4	G/O	D_RANGE_SW
5	P/L	N_RANGE_SW
6	P/B	R_RANGE_SW
7	BR/W	P_RANGE_SW
11	W/R	SENSOR GROUND
12	V	CVT FLUID TEMPERATURE SENSOR
14	W	G SENSOR
16	V/W	SECONDARY PRESSURE SENSOR
17	LG	PRIMARY PRESSURE SENSOR
23	P	CAN-L
24	BR	INPUT SPEED SENSOR
26	L/O	SENSOR POWER
30	R/Y	LINE PRESSURE SOLENOID VALVE
33	L	CAN-H
34	LG/R	OUTPUT SPEED SENSOR
35	LG	PRIMARY SPEED SENSOR

Terminal No.	Color Of Wire	Signal Name [Specification]
37	L/W	SELECT SOLENOID VALVE
38	V/R	TORQUE CONVERTER CLUTCH SOLENOID VALVE
39	W/B	SECONDARY PRESSURE SOLENOID VALVE
40	B/R	PRIMARY PRESSURE SOLENOID VALVE
41	B	GROUND
42	B	GROUND
45	LG	BATTERY POWER SUPPLY
46	LG	BATTERY POWER SUPPLY
47	Y	IGNITION POWER SUPPLY
48	Y	IGNITION POWER SUPPLY

Connector No.	F24
Connector Name	CVT UNIT
Connector Type	RK22FGY

H.S.

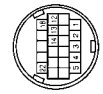

Terminal No.	Color Of Wire	Signal Name [Specification]
1	R/Y	-
2	B/R	-
3	W/B	-
4	L/W	-
5	V/R	-
12	V	-
13	LG	-
14	V/W	-
18	W/R	-
22	L/O	-

Connector No.	F87
Connector Name	JOINT CONNECTOR-F01
Connector Type	RH10FB

H.S.

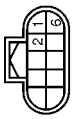

Terminal No.	Color Of Wire	Signal Name [Specification]
1	LG	-
2	L/R	-
6	LG	-

Connector No.	F88
Connector Name	JOINT CONNECTOR-F02
Connector Type	RH10FB

H.S.

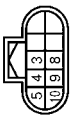

Terminal No.	Color Of Wire	Signal Name [Specification]
3	Y	-
4	Y	-
5	Y	-
8	Y	-
9	Y	-
10	Y	-

Connector No.	F89
Connector Name	JOINT CONNECTOR-F03
Connector Type	RH10FB

H.S.

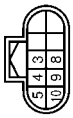

Terminal No.	Color Of Wire	Signal Name [Specification]
3	B	-
4	B	-
5	B	-
8	B	-
9	B	-
10	B	-

Connector No.	F123
Connector Name	WIRE TO WIRE
Connector Type	TK16FGY-1V

H.S.

Terminal No.	Color Of Wire	Signal Name [Specification]
1	L	-
2	W	-
3	G/R	-
4	P/B	-
5	R	-
6	L/R	-
7	P	-
8	P	-
9	W/R	-
10	Y/B	-
11	BR/W	-
12	BR	-
13	G	-
14	B	-

JRDWC6974GB

cardiagn.com

CVT CONTROL SYSTEM

15	L/O	-
16	R	-

Connector No.	F250
Connector Name	CVT UNIT
Connector Type	RK22MGY-X

H.S.

Terminal No.	Color Of Wire	Signal Name [Specification]
1	-	-
2	-	-
3	-	-
4	-	-
5	-	-
12	-	-
13	-	-
14	-	-
18	-	-
22	-	-

Connector No.	F251
Connector Name	CONTROL VALVE
Connector Type	IP16FGY

H.S.

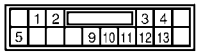

Terminal No.	Color Of Wire	Signal Name [Specification]
1	GY	-
2	BR	-
3	Y	-
4	P	-
5	B	-
9	O	-
10	L	-
11	W	-
12	R	-
13	B/Y	-

Connector No.	M4
Connector Name	DATA LINK CONNECTOR
Connector Type	BD16FW

H.S.

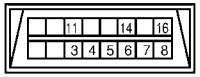

Terminal No.	Color Of Wire	Signal Name [Specification]
3	LG	-
4	GR	-
5	GR	-
6	L	-
7	R	-
8	G	-
11	SB	-
14	P	-
16	P	-

Connector No.	M7
Connector Name	FUSE BLOCK (J/B)
Connector Type	NS10FW-CS

H.S.

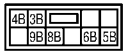

Terminal No.	Color Of Wire	Signal Name [Specification]
3B	V	-
4B	W	-
5B	BR	-
6B	O	-
8B	R/L	-
9B	GR	-

Connector No.	M34
Connector Name	COMBINATION METER
Connector Type	TH40FW-NH

H.S.

Terminal No.	Color Of Wire	Signal Name [Specification]
1	O	BATTERY POWER SUPPLY [With automatic drive positioner]
1	P	BATTERY POWER SUPPLY [Without automatic drive positioner]
2	G	IGNITION SIGNAL [Without automatic drive positioner]
2	Y	IGNITION SIGNAL [With automatic drive positioner]
3	B	GROUND
4	B	GROUND
5	B	ILLUMINATION CONTROL SIGNAL [Without automatic drive positioner]
5	B/P	ILLUMINATION CONTROL SIGNAL [With automatic drive positioner]
8	G	TRIP RESET SWITCH SIGNAL [Without automatic drive positioner]
8	SB	TRIP RESET SWITCH SIGNAL [With automatic drive positioner]
10	P	METER CONTROL SWITCH GROUND
11	G	ENTER SWITCH SIGNAL
12	BR	SELECT SWITCH SIGNAL [With automatic drive positioner]
12	R	SELECT SWITCH SIGNAL [Without automatic drive positioner]
13	W	ILLUMINATION CONTROL SWITCH SIGNAL [-] [Without automatic drive positioner]
13	Y	ILLUMINATION CONTROL SWITCH SIGNAL [-] [With automatic drive positioner]
14	G	ILLUMINATION CONTROL SWITCH SIGNAL [+] [Without automatic drive positioner]
14	V	ILLUMINATION CONTROL SWITCH SIGNAL [+] [With automatic drive positioner]
15	BR	AIR BAG SIGNAL
16	L	ENGINE COOLANT TEMPERATURE SIGNAL
18	L	AMBIENT SENSOR SIGNAL [Without automatic drive positioner]
18	LG	AMBIENT SENSOR SIGNAL [With automatic drive positioner]
19	R	A/C AUTO AMP. CONNECTION RECOGNITION SIGNAL
20	G	AMBIENT SENSOR GROUND [Without automatic drive positioner]
20	Y	AMBIENT SENSOR GROUND [With automatic drive positioner]
21	L	CAN-H
22	P	CAN-L
23	B	GROUND
24	B	FUEL LEVEL SENSOR GROUND
25	BR	ALTERNATOR SIGNAL [With automatic drive positioner]
25	W	ALTERNATOR SIGNAL [Without automatic drive positioner]
26	BR	PARKING BRAKE SWITCH SIGNAL
27	BE	BRAKE FLUID LEVEL SWITCH SIGNAL [Without automatic drive positioner]
27	Y	BRAKE FLUID LEVEL SWITCH SIGNAL [With automatic drive positioner]
28	V	SECURITY SIGNAL
29	G	WASHER LEVEL SWITCH SIGNAL
31	SB	VEHICLE SPEED SIGNAL [8-PULSE]
32	P	OVERDRIVE CONTROL SWITCH SIGNAL
34	O	FUEL LEVEL SENSOR SIGNAL
35	BR	SEAT BELT BUCKLE SWITCH SIGNAL [DRIVER SIDE] [With automatic drive positioner]
35	P	SEAT BELT BUCKLE SWITCH SIGNAL [DRIVER SIDE] [Without automatic drive positioner]
36	BR	PASSENGER SEAT BELT WARNING SIGNAL

Connector No.	M57
Connector Name	CVT SHIFT SELECTOR
Connector Type	TH12FW-NH

H.S.

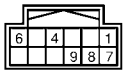

Terminal No.	Color Of Wire	Signal Name [Specification]
1	P	-
4	B	-
6	W	-
7	B	-
8	BE	-
9	G	-

Connector No.	M121
Connector Name	BCM (BODY CONTROL MODULE)
Connector Type	TH40FB-NH

H.S.

Terminal No.	Color Of Wire	Signal Name [Specification]
1	W	REAR WINDOW DEF RELAY CONT
2	R	COMBI SW INPUT 5
3	G	COMBI SW INPUT 4

JRDWC6975GB

cardiagn.com

CVT CONTROL SYSTEM

4	BE	COMBI SW INPUT 3
5	G	COMBI SW INPUT 2
6	W	COMBI SW INPUT 1
7	W	KEY CYL UNLOCK SW
8	GR	PW SW COMM [With automatic slide door]
8	Y	KEY CYL LOCK SW [Without automatic slide door]
9	GR	STOP LAMP SW 1
12	GR	DOOR LK & UNLK SW LOCK
13	BR	DOOR LK & UNLK SW UNLOCK
14	L	OPTICAL SENS
15	W	REAR WINDOW DEF SW
16	Y	DIMMER
17	O	SENS PWR SPLY
18	R	RECEIV/SENS GND
21	GR	NATS ANT AMP.
23	W	SECURITY IND CONT
25	P	NATS ANT AMP.
27	O	A/C ON
28	BR	BLOWER FAN ON
29	P	HAZARD SW
30	L	BK DOOR OPNR SW
31	G	DR DOOR UNLK SENS
32	R	COMBI SW OUTPUT 5
33	W	COMBI SW OUTPUT 4
34	P	COMBI SW OUTPUT 3
35	GR	COMBI SW OUTPUT 2
36	R	COMBI SW OUTPUT 1
37	G	DETENT SW
38	BE	RECEIVER COMM
39	L	CAN-H
40	P	CAN-L

JRDWC6976GB

cardiagn.com

CVT SHIFT LOCK SYSTEM

Wiring Diagram

INFOID:0000000012404438

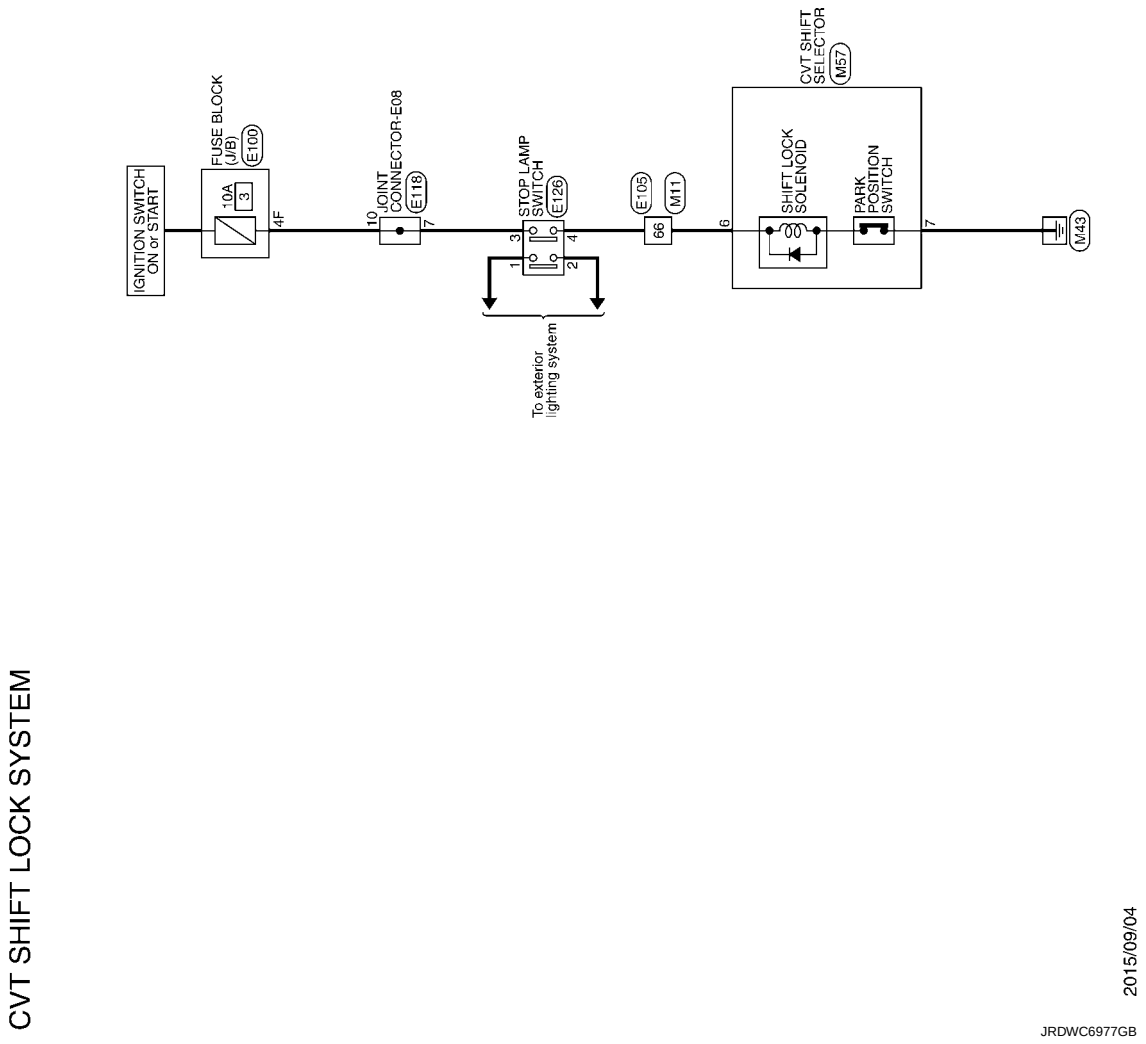

cardiagn.com

CVT SHIFT LOCK SYSTEM

Connector No.	E100
Connector Name	FUSE BLOCK (J/B)
Connector Type	NS16FW-CS

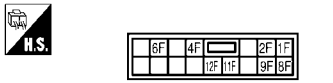

Terminal No.	Color Of Wire	Signal Name [Specification]
11F	G	-
12F	V	-
1F	SB	-
2F	R	-
4F	L	-
6F	LG	-
8F	P	-
9F	BR	-

Connector No.	E105
Connector Name	WIRE TO WIRE
Connector Type	TH70MW-CS10-M3

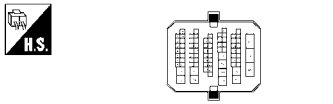

Terminal No.	Color Of Wire	Signal Name [Specification]
1	SHIELD	-
2	W	-
3	B	-
4	R	-
6	LG	-
7	R	-
8	GR	-
9	V	-
10	BR	-
11	Y	-
12	O	-
13	W	-
14	L	-
15	P	-
31	GR	-
32	V	-
37	BR	-
38	G	-
39	V	-
40	P	-
41	L	-
42	LG	-
43	O	-
45	P	-
46	SB	-
47	V	-
49	L	-
51	BR	-
52	G	-
53	B	-
54	O	-
55	Y	-
56	SHIELD	-
61	P	-
62	G	-
63	W/L	-
64	W/R	-
66	W	-
67	Y	-
69	R	-
71	R	-
72	L	-
73	GR	-
74	Y	-
75	SB	-
76	Y	-
77	G	-
78	O	-
80	R	-
81	L	-
82	LG	-
83	R	-

Connector No.	E118
Connector Name	JOINT CONNECTOR-E08
Connector Type	BJ30FW

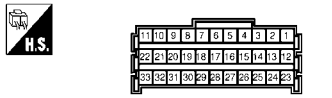

Terminal No.	Color Of Wire	Signal Name [Specification]
1	L	-
2	L	-
3	L	-
6	Y	-
7	Y	-
8	Y	-
9	Y	-
10	Y	-
11	Y	-
12	R	-
13	R	-
14	R	-
15	V	-
16	V	-
17	V	-
19	L	-
20	L	-
21	L	-
23	SB	-
24	SB	-
25	BR	-
26	BR	-
27	R	-
28	R	-
29	B/Y	-
30	B/Y	-
32	P	-
33	P	-

Connector No.	E126
Connector Name	STOP LAMP SWITCH
Connector Type	M04FB-LC

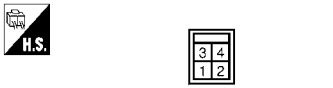

Terminal No.	Color Of Wire	Signal Name [Specification]
1	P	-
2	R	-
3	O	-
4	W	-

Connector No.	M11
Connector Name	WIRE TO WIRE
Connector Type	TH70FW-CS10-M3

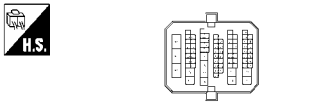

Terminal No.	Color Of Wire	Signal Name [Specification]
1	SHIELD	-
2	W	-
3	B	-
4	R	-
6	G	-
7	R	-
8	G	-
9	B	-
10	R	-
11	W	-
12	L	- [Without automatic drive positioner]
12	LG	- [With automatic drive positioner]
13	G	- [Without automatic drive positioner]
13	Y	- [With automatic drive positioner]
14	L	-

JRDWC6978GB

cardiagn.com

CVT SHIFT LOCK SYSTEM

15	P	-
31	R	-
32	LG	-
37	BR	- [With automatic drive positioner]
37	W	- [Without automatic drive positioner]
38	R	-
39	BE	- [Without automatic drive positioner]
39	Y	- [With automatic drive positioner]
40	P	-
41	L	-
42	G	-
43	W	-
45	P	-
46	V	-
47	R	-
49	G	-
51	G	-
52	W	-
53	B	-
54	LG	-
55	L	-
56	SHIELD	-
61	R	-
62	W	-
63	B	-
64	W	-
66	W	-
67	BR	-
69	P	-
71	R	-
72	L	-
73	LG	-
74	Y	-
75	Y	-
76	V	-
77	P	-
78	BR	-
80	Y	-
81	W	-
82	L	-
83	R	-

Connector No.	M57
Connector Name	CVT SHIFT SELECTOR
Connector Type	TH12FW-NH

H.S.

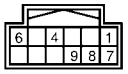

Terminal No.	Color Of Wire	Signal Name [Specification]
1	P	-
4	B	-
6	W	-
7	B	-
8	BE	-
9	G	-

JRDWC6979GB

cardiagn.com

BASIC INSPECTION

DIAGNOSIS AND REPAIR WORK FLOW

Flowchart of Trouble Diagnosis

INFOID:0000000012404439

NOTE:
"DTC" includes DTC at the 1st trip.

1. OBTAIN INFORMATION ABOUT SYMPTOM

Refer to TM-72, "Question sheet" and interview the customer to obtain the malfunction information (conditions and environment when the malfunction occurred) as much as possible when the customer brings in the vehicle.

>> GO TO 2.

2. CHECK DTC

1. Before checking the malfunction, check whether any DTC exists.
2. If DTC exists, perform the following operations.
- Records the DTCs. (Print out using CONSULT and affix to the Work Order Sheet.)
- Erase DTCs.
- Check the relation between the cause found by DTC and the malfunction information from customer. TM-176, "Symptom Table" can be used effectively.
3. Check the relevant information including STI, etc.

Do malfunction information and DTC exist?

Malfunction information and DTC exist.>>GO TO 3.
Malfunction information exists but no DTC.>>GO TO 4.
No malfunction information, but DTC exists.>>GO TO 5.

3. REPRODUCE MALFUCTION SYSTEM

Check the malfunction described by the customer on the vehicle.
Check if the behavior is fail safe or normal operation. Refer to TM-54, "Fail-safe".
Interview sheet can be used effectively when reproduce malfunction conditions. Refer to TM-72, "Question sheet".
Verify the relationship between the symptom and the conditions in which the malfunction described by the customer occurs.

>> GO TO 5.

4. REPRODUCE MALFUNCTION SYMPTOM

Check the malfunction described by the customer on the vehicle.
Check if the behavior is fail safe or normal operation. Refer to TM-54, "Fail-safe".
Interview sheet can be used effectively when reproduce malfunction conditions. Refer to TM-72, "Question sheet".
Verify the relationship between the symptom and the conditions in which the malfunction described by the customer occurs.

>> GO TO 6.

5. PERFORM "DTC CONFIRMATION PROCEDURE"

Perform "DTC CONFIRMATION PROCEDURE" of the appropriate DTC to check if DTC is detected again.
Refer to TM-58, "DTC Inspection Priority Chart" when multiple DTCs are detected, and then determine the order for performing the diagnosis.

Is any DTC detected?

YES >> GO TO 7.
NO >> Follow GI-41, "Intermittent Incident" to check.

6. IDENTIFY MALFUNCTIONING SYSTEM WITH "DIAGNOSIS CHART BY SYMPTOM"

cardiagn.com

Use TM-176, "Symptom Table" from the symptom inspection result in step 4. Then identify where to start performing the diagnosis based on possible causes and symptoms.

>> GO TO 8.

7. REPAIR OR REPLACE THE MALFUNCTIONING PARTS

Repair or replace the detected malfunctioning parts.
Reconnect parts or connector after repairing or replacing, and then erase DTC if necessary.

>> GO TO 8.

8. FINAL CHECK

Perform “DTC CONFIRMATION PROCEDURE” again to make sure that the repair is correctly performed.
Check that malfunctions are not reproduced when obtaining the malfunction information from the customer, referring to the symptom inspection result in step 3 or 4.

Is DTC or malfunction symptom reproduced?

YES-1 (DTC is reproduced.)>>GO TO 5.
YES-2 (Malfunction is reproduced.)>>GO TO 6.
NO >> Before delivering the vehicle to the customer, make sure that DTC is erased.

Question sheet

INFOID:0000000012404440

DESCRIPTION

There are many operating conditions that may cause a malfunction of the transmission parts. By understanding those conditions properly, a quick and exact diagnosis can be achieved.
In general, perception of a problem varies depending on individuals. Ask the customer about his/her concerns carefully. It is important to understand the phenomenon or status. To systemize all the information for the diagnosis, prepare the question sheet referring to the question points.
In some cases, multiple conditions that appear simultaneously may cause a DTC to be detected.

KEY POINTS

WHAT ..... Vehicle & engine model
WHEN ..... Date, Frequencies
WHERE..... Road conditions
HOW ..... Operating conditions, Weather conditions, Symptoms

SEF907L

Worksheet Sample

Question sheet					
Customer's name	MR/MS	Registration number		Initial year registration	Year Month day
		Vehicle type		Chassis No.	
Storage date	Year Month day	Engine		Mileage	km/mile
Symptom		☐ Vehicle does not start. (☐ R position ☐ D position ☐ L position ☐ M position)			
		☐ Upshifting does not occur. ☐ Downshifting does not occur.			
		☐ Lock-up malfunction			
		☐ Shift point is too high. ☐ Shift point is too low.			
		☐ Shift shock (☐ N⇒D ☐ Lock-up ☐ R, D, L and M position)			
		☐ Slip (☐ N⇒D ☐ Lock-up ☐ R, D, L and M position)			
		☐ Noise ☐ Vibration			
		When selector lever position is shifted, shift pattern does not change.			
		☐ Other ( )			
First occurrence		☐ Recently (as from month of year)			
Frequency of occurrence		☐ Always ☐ Under certain conditions ☐ Sometimes (time(s)/day)			

cardiagn.com

Question sheet

Customer's name	MR/MS	Registration number		Initial year registration	Year Month day
		Vehicle type		Chassis No.	
Storage date	Year Month day	Engine		Mileage	km/mile
Climate conditions		Irrelevant			
	Weather	☐ Clear ☐ Cloud ☐ Rain ☐ Snow ☐ Others)			
	Temperature	☐ Hot ☐ Warm ☐ Cool ☐ Cold ☐ Temperature (Approx. °C/°F)			
	Relative humidity	☐ High ☐ Moderate ☐ Low			
Transaxle condition		☐ In cold-start ☐ During warm-up (approx. °C/°F) ☐ After warm-up ☐Engine speed: rpm			
Road conditions		☐ Urban area ☐ Suburb area ☐ Highway ☐ Mountainous road (uphill or downhill)			
Operating condition, etc.		Irrelevant ☐ When engine starts ☐ During idling ☐ During driving ☐ During acceleration ☐ At constant speed driving ☐ During deceleration ☐ During cornering (RH curve or LH curve)			
Other conditions					

cardiagn.com

ADDITIONAL SERVICE WHEN REPLACING TCM

Description

INFOID:0000000012404441

Always perform the following items when the TCM is replaced.

TCM PROGRAMMING
- Since vehicle specifications are not yet written in a new TCM, it is necessary to write them with CONSULT.
  CAUTION:
  When replacing TCM, save TCM data on CONSULT before removing TCM.

SAVING AND WRITING OF TCM DATA
- TCM performs accurate control by retrieving data (inherent characteristic value) of each solenoid. For this reason, it is necessary to save data of current TCM in CONSULT before replacing the TCM. After this, the saved data must be written in new TCM.

Refer to TM-74, "Work Procedure".

Work Procedure

INFOID:0000000012404442

1. SAVE TCM DATA (IP CHARACTERISTICS VALUE)

NOTE:
Save necessary data stored in TCM in CONSULT according to the following instructions:

With CONSULT
1. Turn ignition switch OFF.
2. Connect all of disconnected connectors.
3. Turn ignition switch ON.
4. Select “Work Support” in “TRANSMISSION”.
5. Select “READ IP CHARA - REPLACEMENT TCM”.
6. Import data according to the instructions on the CONSULT screen.

>> GO TO 2.

2. SAVE TCM DATA (VEHICLE SPECIFICATIONS)

NOTE:
Save necessary data stored in TCM in CONSULT according to the following instructions:

With CONSULT
1. Turn ignition switch OFF.
2. Turn ignition switch ON.
3. Select “Re/programming, Configuration”.
4. Select “AT/CVT”.
   NOTE:
   If “AT/CVT” is not displayed and TCM data cannot be saved on CONSULT, GO TO 3.
5. Select “Programming”.
6. Save TCM data on CONSULT according to the CONSULT display.

>> GO TO 3.

3. REPLACE TCM

1. Turn ignition switch OFF and wait for 10 seconds.
2. Replace TCM. Refer to TM-192, "Removal and Installation".

>> GO TO 4.

4. WRITE TCM DATA (VEHICLE SPECIFICATIONS)

NOTE:
Write data saved in CONSULT into a new TCM according to the following instructions:

With CONSULT
1. Select “Programming”.
2. Perform programming according to the CONSULT display.

cardiagn.com

>> GO TO 5.

5. WRITE TCM DATA (IP CHARACTERISTICS VALUE)

NOTE:
Write data saved in CONSULT into a new TCM according to the following instructions:

With CONSULT

1. Turn ignition switch OFF and wait for 10 seconds.
2. Turn ignition switch ON.
3. Select “Work Support” in “TRANSMISSION”.
4. Select “WRITE IP CHARA - REPLACEMENT TCM”.
5. Write data saved in CONSULT in TCM according to the instructions on the CONSULT screen.

>> WORK END

cardiagn.com

ADDITIONAL SERVICE WHEN REPLACING TRANSAXLE ASSEMBLY

Description

INFOID:0000000012404443

Perform the following work after the transaxle assembly is replaced.

WRITING TCM DATA
- TCM performs accurate control by retrieving data (inherent characteristic value) of each solenoid. For this reason, after replacing transaxle assembly, it is necessary to write new data in TCM.

ERASING OF CVT FLUID DEGRADATION LEVEL DATA
- TCM records the degradation level of the CVT fluid calculated from the vehicle driving status. Therefore, if the transaxle assembly is replaced, it is necessary to erase the CVT fluid degradation level data recorded by TCM.

Refer to TM-76, "Work Procedure".

Work Procedure

INFOID:0000000012404444

1. CHECK THE SERIAL NUMBER

Write down the serial number of new transaxle assembly.

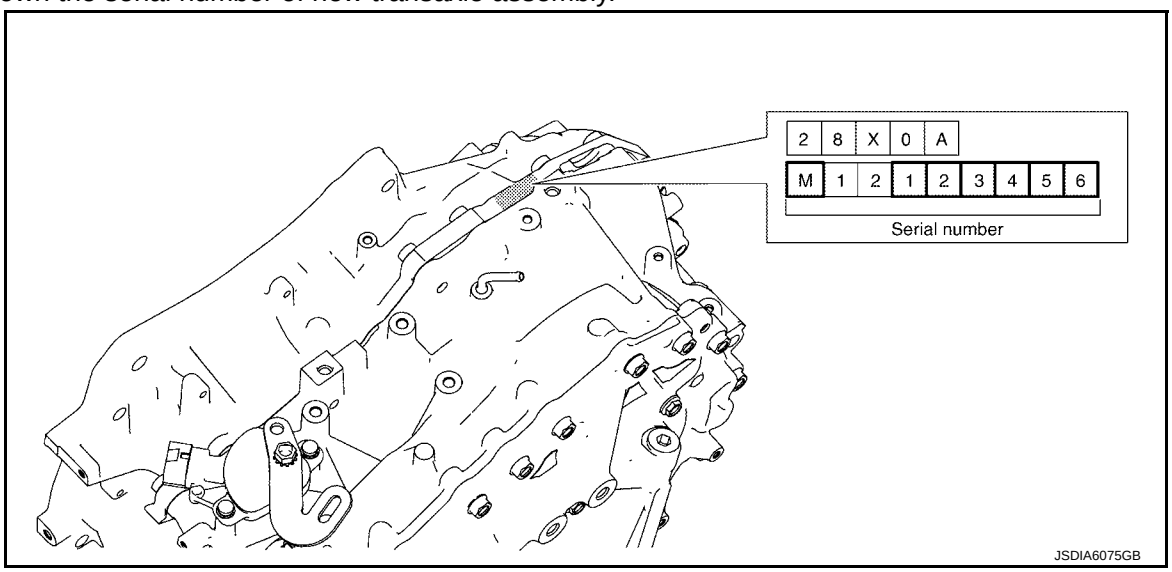

>> GO TO 2.

2. WRITE TCM DATA (IP CHARACTERISTICS VALUE)

NOTE:
Write data of new solenoid in TCM according to the following instructions:

With CONSULT

CAUTION:
When the work is interrupted, obtain data again from the supplied CD.

1. Shift the selector lever to the P position.
2. Turn ignition switch OFF and wait for 10 seconds.
3. Turn ignition switch ON.
4. Insert the supplied CD into CONSULT.
5. Select “Work Support” in “TRANSMISSION”.
6. Select “WRITE IP CHARA - REPLACEMENT AT/CVT”.
7. Check that the serial number displayed on CONSULT screen and those written in the memo agree.
8. Write data in TCM according to the instructions on the CONSULT screen.
   NOTE:
   When writing is complete, the shift position indicator of the combination meter displays P.

>> GO TO 3.

cardiagn.com

3. ERASE CVT FLUID DEGRADATION LEVEL DATA

With CONSULT

1. Select “WORK SUPPORT” in “TRANSMISSION”.
2. Select “CONFORM CVTF DETERIORTN”.
3. Touch “Clear”.

>> WORK END

cardiagn.com

ADDITIONAL SERVICE WHEN REPLACING TCM AND TRANSAXLE ASSEMBLY

Description

INFOID:0000000012404445

When replacing TCM and transaxle assembly as a set, perform the following work.

TCM PROGRAMMING
- Since vehicle specifications are not yet written in a new TCM, it is necessary to write them with CONSULT.
  CAUTION:
  When replacing TCM, save TCM data on CONSULT before removing TCM.

WRITING TCM DATA
- TCM performs accurate control by retrieving data (inherent characteristic value) of each solenoid. For this reason, after replacing TCM and transaxle assembly, it is necessary to write new data in TCM.

Refer to TM-78, "Work Procedure".

Work Procedure

INFOID:0000000012404446

1. SAVE TCM DATA (VEHICLE SPECIFICATIONS)

With CONSULT
1. Turn ignition switch OFF.
2. Connect all of disconnected connectors.
3. Turn ignition switch ON.
4. Select “Re/programming, Configuration”.
5. Select “AT/CVT”.
   NOTE:
   If “AT/CVT” is not displayed and TCM data cannot be saved on CONSULT, GO TO 2.
6. Select “Programming”.
7. Save TCM data on CONSULT according to the CONSULT display.

>> GO TO 2.

2. REPLACE TCM AND TRANSAXLE ASSEMBLY

1. Turn ignition switch OFF and wait for 10 seconds.
2. Replace TCM and transaxle assembly. Refer to TM-192, "Removal and Installation" (TCM), TM-215, "Removal and Installation" (Transaxle assembly).
   CAUTION:
   Write down the serial number of new transaxle assembly.

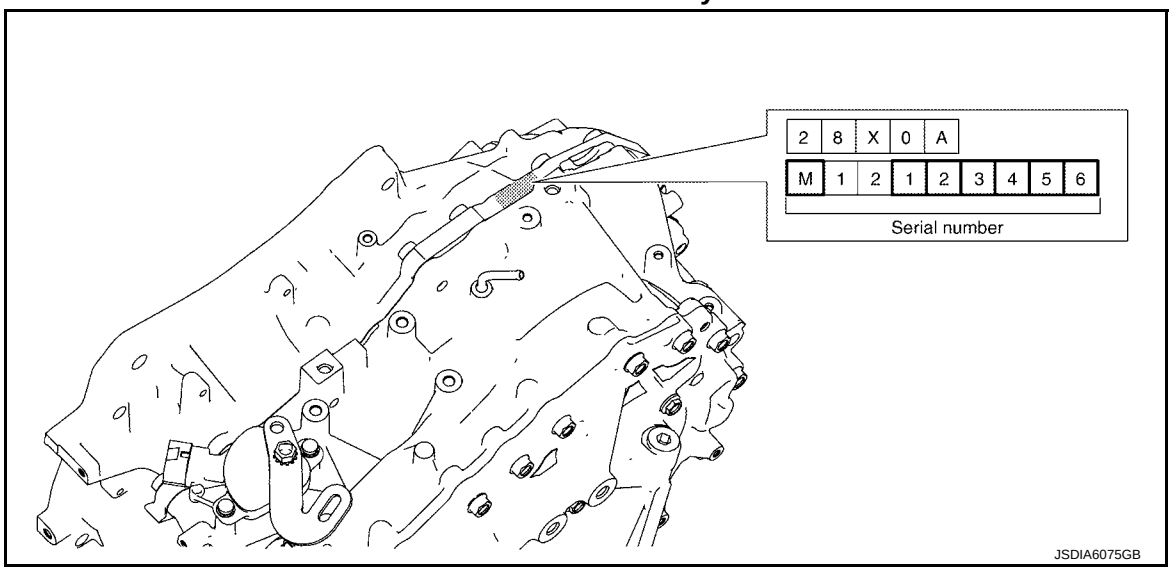

>> GO TO 3.

cardiagn.com

3. WRITE TCM DATA (VEHICLE SPECIFICATIONS)

NOTE:
Write data saved in CONSULT into a new TCM according to the following instructions:

With CONSULT

1. Select “Programming”.
2. Perform programming according to the CONSULT display.

>> GO TO 4.

4. WRITE TCM DATA (IP CHARACTERISTICS VALUE)

NOTE:
Write data of new solenoid in TCM according to the following instructions:

With CONSULT

CAUTION:
When the work is interrupted, obtain data again from the supplied CD.

1. Shift the selector lever to the P position.
2. Turn ignition switch OFF and wait for 10 seconds.
3. Turn ignition switch ON.
4. Insert the supplied CD into CONSULT.
5. Select “Work Support” in “TRANSMISSION”.
6. Select “WRITE IP CHARA - REPLACEMENT AT/CVT”.
7. Check that the serial number displayed on CONSULT screen and those written in the memo agree.
8. Write data in TCM according to the instructions on the CONSULT screen.
   NOTE:
   When writing is complete, the shift position indicator of the combination meter displays P.

>> WORK END

cardiagn.com

CALIBRATION OF G SENSOR

Description

INFOID:0000000012404447

TCM stores calibration data (inherent characteristic value) of G sensor to provide accurate control. Therefore, it is required to perform calibration of G sensor after the following work is performed.
- Removal/installation or replacement of G sensor
- Replacement of TCM
- Replacement of control valve
- Replacement of transaxle assembly
- Erasing the calibration data of TCM

Refer to TM-80, "Work Procedure".

Work Procedure

INFOID:0000000012404448

1. PREPARATION BEFORE CALIBRATION PROCEDURE

1. Park the vehicle on a level surface.
2. Adjust air pressure of all tires to the specified pressure. Refer to WT-55, "Tire Air Pressure".

>> GO TO 2.

2. PERFORM CALIBRATION

With CONSULT
1. Turn ignition switch ON.
   CAUTION:
   Never start engine.
2. Select “Work Support” in “TRANSMISSION”.
3. Select “G SENSOR CALIBRATION”.
4. Touch “Start”.
   CAUTION:
   Never swing the vehicle during “G sensor calibration”.

Is “COMPLETED” displayed?

YES >> GO TO 3.
NO >> Perform steps 1 and 2 again.

3. PERFORM THE SELF-DIAGNOSIS

With CONSULT
1. Turn ignition switch OFF and wait for 10 seconds.
2. Turn ignition switch ON.
3. Select “Self Diagnostic Results” in “TRANSMISSION”.

Is “P1585” detected?

YES >> Go to TM-59, "DTC Index".
NO >> Calibration end

cardiagn.com

IDLE NEUTRAL CONTROL LEARNING

Description

INFOID:0000000012404449

TCM corrects an individual difference in clutch clearance of the transaxle assembly by performing the idle neutral control learning and enables accurate idle neutral control.
Therefore, it is required to perform idle neutral control learning after the following work is performed.
- Replacement of TCM
- Replacement of transaxle assembly

Refer to TM-81, "Work Procedure".

Work Procedure

INFOID:0000000012404450

1. PREPARATION BEFORE WORK

With CONSULT
1. Start the engine.
   CAUTION:
   Never drive the vehicle.
2. Select “DATA MONITOR” in “TRANSMISSION.”
3. Select “FLUID TEMP.”

Is “FLUID TEMP” 20°C (68°F) or more?

YES >> GO TO 2.
NO >> 1. Warm up the transaxle assembly until “FLUID TEMP” reaches 20°C(68°F) or more.
2. GO TO 2.

2. PERFORM IDLE NEUTRAL CONTROL LEARNING

CAUTION:
Perform this work with the flat road. (± 2.6 %or less)
1. Shift the selector lever to “D” position.
2. Drive the vehicle at the 8 km/h (5 MPH) or more.
3. Brake pedal is depressed and stop the vehicle.
4. Maintain the following conditions for 30 seconds or more.

Stop lamp switch	: ON
Accelerator pedal position sensor	: OFF
Engine speed	: 475 – 700 rpm
Electrical load	: Not applied*

*: Rear window defogger switch, air conditioner switch, lighting switch, etc. are OFF. Steering wheel is straight ahead. (Parking lamp ON is possible)
5. Brake pedal is released and drive the vehicle.
6. Perform steps 1 and 2 again. (one time)

>> INSPECTION END

cardiagn.com

STALL TEST

Work Procedure

INFOID:0000000012404451

INSPECTION

1. Check the engine oil level. Replenish if necessary. Refer to LU-8, "Inspection".
2. Check for leak of the CVT fluid. Refer to TM-180, "Inspection".
3. Drive for about 10 minutes to warm up the vehicle so that the CVT fluid temperature is 50 to 80°C (122 to 176°F).
4. Be sure to apply the parking brake and block the tires.
5. Start the engine, depress the brake pedal and put the selector lever to the D position.
6. While depressing the brake pedal, depress the accelerator pedal gradually.
7. Read the stall speed quickly. Then, release your foot from the accelerator pedal quickly.
   CAUTION:
   Do not depress the accelerator pedal for 5 seconds or more during the test.

   Stall speed : Refer to TM-222, "Stall Speed".
8. Place the selector lever in the N position.
9. Cool the CVT fluid.
   CAUTION:
   Run the engine with the idle speed for at least 1 minute.
10. Put the selector lever to the R position and perform Step 6 to Step 9 again.

NARROWING-DOWN MALFUNCTIONING PARTS

	Selector lever position		Possible cause
	D	R	
Stall speed	H	O	• Forward clutch
	O	H	• Reverse brake
	L	L	• Engine • Torque converter one way clutch
	H	H	• Line pressure is low. • Primary pulley • Secondary pulley • Steel belt

O: Within the stall speed standard value.

H: Stall speed is higher than the standard value.

L: Stall speed is lower than the standard value.

cardiagn.com

CVT POSITION

Inspection and Adjustment

INFOID:0000000012404452

INSPECTION

1. Turn ignition switch ON (engine stop) when selector lever is “P” position.
2. Check that selector lever can be shifted to other than “P” position when brake pedal is depressed. Also check that selector lever can be shifted from “P” position only when brake pedal is depressed.
3. Shift the selector lever and check for excessive effort, sticking, noise or rattle.
4. Check that selector lever stops at each position with the feel of engagement when it is moved through all the positions. Check that the actual position of selector lever matches the position shown by shift position indicator and manual lever on the transaxle.
5. The method of operating selector lever to individual positions correctly should be as shown.
6. When selector button is pressed in “P”, “R”, “N”, “D” or “L” position without applying forward/backward force to selector lever, check button operation for sticking.
7. Check that back-up lamps illuminate only when selector lever is placed in the “R” position.
8. When in “R” position, check that back-up lamps do not illuminate even when the selector lever is in the “P” position.
   CAUTION:
   Check the lighting without pressing shift button.

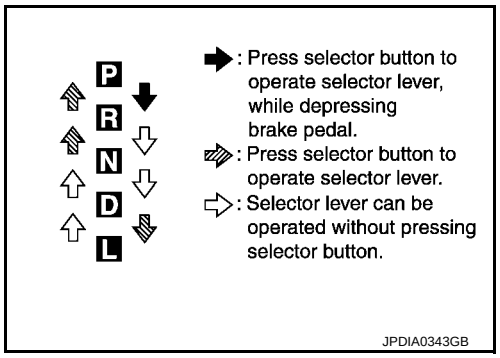

9. Check that back-up lamps do not illuminate when selector lever is pushed toward the “R” position when in the “P” or “N” position.
   CAUTION:
   Check the lighting without pressing shift button.
10. Check that the engine can only be started with selector lever in the “P” and “N” positions.
11. Check that transaxle is locked completely in “P” position.

ADJUSTMENT

1. Shift the shift selector to the “P” position.
   CAUTION:
   Turn wheels at least a quarter turn and be certain the park position mechanism is fully engaged.
2. Loosen the control cable nut (A) and set manual lever (B) the the "P" position.
   ⇦: Front
   CAUTION:
   Do not apply force to the manual lever.
3. Position the manual lever in the “P” position.
4. Tighten the control cable nut to specified torque. Refer to TM-190, "Exploded View".
   CAUTION:
   Hold manual lever securely in the "P" position when tightening control cable nut (A).

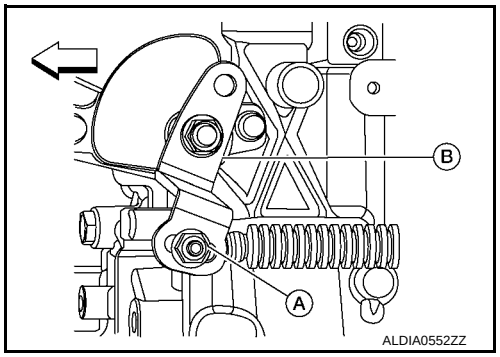

cardiagn.com

HOW TO ERASE PERMANENT DTC

Description

INFOID:0000000012404453

Permanent DTC can be erased by driving each driving pattern.
ECM recognizes each driving pattern; it transmits signals to each control module when the driving is complete. Each control module erases permanent DTC based on those signals. For details, refer to EC-161, "Description".

cardiagn.com

DTC/CIRCUIT DIAGNOSIS

U0073 COMMUNICATION BUS A OFF

DTC Logic

INFOID:0000000012404454

DTC DETECTION LOGIC

DTC	CONSULT screen terms (Trouble diagnosis content)	DTC detection condition	Possible causes
U0073	COMM BUS A OFF (Control Module Communication Bus A Off)	TCM communication blockage lasts for 2 seconds or more when turning ON the ignition switch. (Communication not established.)	Harness or connector (CAN communication line is error)

DTC CONFIRMATION PROCEDURE

1. PREPARATION BEFORE WORK

If another “DTC CONFIRMATION PROCEDURE” occurs just before, turn ignition switch OFF and wait for at least 10 seconds, then perform the next test.

>> GO TO 2.

2. PERFORM DTC CONFIRMATION PROCEDURE

1. Start the engine and wait for at least 5 seconds.
2. Check the DTC.

Is “U0073” detected?

YES >> Go to TM-85, "Diagnosis Procedure".
NO >> INSPECTION END

Diagnosis Procedure

INFOID:0000000012404455

For the diagnosis procedure, refer to LAN-17, "Trouble Diagnosis Flow Chart".

cardiagn.com

U0100 LOST COMMUNICATION (ECM A)

DTC Logic

INFOID:0000000012404456

DTC DETECTION LOGIC

DTC	CONSULT screen terms (Trouble diagnosis content)	DTC detection condition	Possible causes
U0100	LOST COMM (ECM A) (Lost Communication With ECM/PCM A)	When the ignition switch is ON, TCM is unable to receive the CAN communications signal from ECM continuously for 2 seconds or more.	• ECM • Harness or connector (CAN communication line is open or shorted)

DTC CONFIRMATION PROCEDURE

1. PREPARATION BEFORE WORK

If another “DTC CONFIRMATION PROCEDURE” occurs just before, turn ignition switch OFF and wait for at least 10 seconds, then perform the next test.

>> GO TO 2.

2. PERFORM DTC CONFIRMATION PROCEDURE

1. Start the engine and wait for at least 5 seconds.
2. Check the DTC.

Is “U0100” detected?

YES >> Go to TM-86, "Diagnosis Procedure".
NO >> INSPECTION END

Diagnosis Procedure

INFOID:0000000012404457

For the diagnosis procedure, refer to LAN-17, "Trouble Diagnosis Flow Chart".

cardiagn.com

U0140 LOST COMMUNICATION (BCM)

DTC Logic

INFOID:0000000012404458

DTC DETECTION LOGIC

DTC	CONSULT screen terms (Trouble diagnosis content)	DTC detection condition	Possible causes
U0140	LOST COMM (BCM) (Lost Communication With Body Control Module)	When the ignition switch is ON, TCM is unable to receive the CAN communications signal from BCM continuously for 2 seconds or more.	• BCM • Harness or connector (CAN communication line is open or shorted)

DTC CONFIRMATION PROCEDURE

1. PREPARATION BEFORE WORK

If another “DTC CONFIRMATION PROCEDURE” occurs just before, turn ignition switch OFF and wait for at least 10 seconds, then perform the next test.

>> GO TO 2.

2. PERFORM DTC CONFIRMATION PROCEDURE

With CONSULT

1. Start the engine and wait for at least 5 seconds.
2. Check the DTC.

Is “U0140” detected?

YES >> Go to TM-87, "Diagnosis Procedure".
NO >> INSPECTION END

Diagnosis Procedure

INFOID:0000000012404459

For the diagnosis procedure, refer to LAN-17, "Trouble Diagnosis Flow Chart".

cardiagn.com

U0141 LOST COMMUNICATION (BCM A)

DTC Logic

INFOID:0000000012404460

DTC DETECTION LOGIC

DTC	CONSULT screen terms (Trouble diagnosis content)	DTC detection condition	Possible causes
U0141	LOST COMM (BCM A) (Lost Communication With Body Control Module A)	When the ignition switch is turned ON, TCM continues no reception of the CAN communication signal from IPDM E/R for 2 seconds or more.	• IPDM E/R • Harness or connector (CAN communication line is open or shorted)

DTC CONFIRMATION PROCEDURE

1. PREPARATION BEFORE WORK

If another “DTC CONFIRMATION PROCEDURE” occurs just before, turn ignition switch OFF and wait for at least 10 seconds, then perform the next test.

>> GO TO 2.

2. PERFORM DTC CONFIRMATION PROCEDURE

With CONSULT

1. Start the engine and wait for at least 5 seconds.
2. Check the DTC.

Is “U0141” detected?

YES >> Go to TM-88, "Diagnosis Procedure".
NO >> INSPECTION END

Diagnosis Procedure

INFOID:0000000012404461

For the diagnosis procedure, refer to LAN-17, "Trouble Diagnosis Flow Chart".

cardiagn.com

U0155 LOST COMMUNICATION (IPC)

DTC Logic

INFOID:0000000012404462

DTC DETECTION LOGIC

DTC	CONSULT screen terms [Trouble diagnosis content]	DTC detection condition	Possible causes
U0155	LOST COMM (IPC) [Lost Communication With Instrument Panel Cluster (IPC) Control Module]	When the ignition switch is ON, TCM is unable to receive the CAN communications signal from the combination meter continuously for 2 seconds or more.	• Combination meter • Harness or connector (CAN communication line is open or shorted)

DTC CONFIRMATION PROCEDURE

1. PREPARATION BEFORE WORK

If another “DTC CONFIRMATION PROCEDURE” occurs just before, turn ignition switch OFF and wait for at least 10 seconds, then perform the next test.

>> GO TO 2.

2. PERFORM DTC CONFIRMATION PROCEDURE

1. Start the engine and wait for at least 5 seconds.
2. Check the DTC.

Is “U0155” detected?

YES >> Go to TM-89, "Diagnosis Procedure".
NO >> INSPECTION END

Diagnosis Procedure

INFOID:0000000012404463

For the diagnosis procedure, refer to LAN-17, "Trouble Diagnosis Flow Chart".

cardiagn.com

U0300 CAN COMMUNICATION DATA

DTC Logic

INFOID:0000000012404464

DTC DETECTION LOGIC

DTC	CONSULT screen terms (Trouble diagnosis content)	DTC detection condition	Possible causes
U0300	CAN COMM DATA (Internal Control Module Software Incompatibility)	When the ignition switch is ON, the data length transmitted from each control unit is shorter than the specified length and the status continues for 2 seconds or more.	Control unit other than TCM

DTC CONFIRMATION PROCEDURE

1. PREPARATION BEFORE WORK

If another “DTC CONFIRMATION PROCEDURE” occurs just before, turn ignition switch OFF and wait for at least 10 seconds, then perform the next test.

>> GO TO 2.

2. CHECK DTC DETECTION

With CONSULT

1. Start the engine and wait for 5 seconds or more.
2. Check the DTC.

Is “U0300” detected?

YES >> Go to TM-90, "Diagnosis Procedure".
NO >> INSPECTION END

Diagnosis Procedure

INFOID:0000000012404465

1. CONTROL UNIT CHECK

Check the number of control units replaced before “U0300” is detected.

Is one control unit replaced?

YES >> The specification of the control unit replaced may be incorrect. Check the part number and the specification.
NO >> GO TO 2.

2. CONTROL UNIT CHECK

With CONSULT

1. Remove one of the control unit replaced.
2. Assemble the old control unit before replacement.
3. Turn ignition switch ON, and wait for 2 seconds or more.
4. Select “Self Diagnostic Results” in “TRANSMISSION”.

Is “U0300”detected?

YES >> Turn OFF the ignition switch and check other control units in the same manner.
NO >> The specification of the control unit removed may be incorrect. Check the part number and the specification.

cardiagn.com

U1000 CAN COMM CIRCUIT

Description

INFOID:0000000012404466

CAN (Controller Area Network) is a serial communication line for real-time application. It is an on-vehicle multiplex communication line with high data communication speed and excellent malfunction detection ability. Many electronic control units are equipped onto a vehicle, and each control unit shares information and links with other control units during operation (not independently). In CAN communication, control units are connected with 2 communication lines (CAN-H line, CAN-L line) allowing a high rate of information transmission with less wiring. Each control unit transmits/receives data but selectively reads required data only.

DTC Logic

INFOID:0000000012404467

DTC DETECTION LOGIC

DTC	CONSULT screen terms (Trouble diagnosis content)	DTC detection condition	Possible causes
U1000	CAN COMM CIRCUIT (CAN Communication Line)	When the ignition switch is ON, TCM cannot send the CAN communication signal continuously for 2 seconds or more.	Harness or connector (CAN communication line is open or shorted)

DTC CONFIRMATION PROCEDURE

1. PREPARATION BEFORE WORK

If another “DTC CONFIRMATION PROCEDURE” occurs just before, turn ignition switch OFF and wait for at least 10 seconds, then perform the next test.

>> GO TO 2.

2. CHECK DTC DETECTION

With CONSULT

1. Start the engine and wait for at least 5 seconds.
2. Check the DTC.

Is “U1000” detected?

YES >> Go to TM-91, "Diagnosis Procedure".
NO >> INSPECTION END

Diagnosis Procedure

INFOID:0000000012404468

For the diagnosis procedure, refer to LAN-17, "Trouble Diagnosis Flow Chart".

cardiagn.com

U1117 LOST COMMUNICATION (ABS)

DTC Logic

INFOID:0000000012404469

DTC DETECTION LOGIC

DTC	CONSULT screen terms (Trouble diagnosis content)	DTC detection condition	Possible causes
U1117	LOST COMM (ABS) (Lost Communication With ABS)	When the ignition switch is ON, TCM is unable to receive the CAN communications signal from ABS actuator and electric unit (control unit) continuously for 2 seconds or more.	• ABS actuator and electric unit (control unit) • Harness or connector (CAN communication line is open or shorted)

DTC CONFIRMATION PROCEDURE

1. PREPARATION BEFORE WORK

If another "DTC CONFIRMATION PROCEDURE" occurs just before, turn ignition switch OFF and wait for at least 10 seconds, then perform the next test.

>> GO TO 2.

2. PERFORM DTC CONFIRMATION PROCEDURE

With CONSULT

1. Start the engine and wait for 5 seconds or more.
2. Check the DTC.

Is “U1117” detected?

YES >> Go to TM-92, "Diagnosis Procedure".
NO >> INSPECTION END

Diagnosis Procedure

INFOID:0000000012404470

For the diagnosis procedure, refer to LAN-17, "Trouble Diagnosis Flow Chart".

cardiagn.com

P062F EEPROM

Description

INFOID:0000000012404471

TCM compares the calculated value stored in the flash ROM with the value stored in TCM. If the calculated value does not agree with the stored value, TCM judges this as a malfunction.

DTC Logic

INFOID:0000000012404472

DTC DETECTION LOGIC

DTC	CONSULT screen terms (Trouble diagnosis content)	DTC detection condition	Possible causes
P062F	EEPROM (Internal Control Module EE-PROM Error)	Flash ROM error is detected when turning ON the ignition switch.	• TCM (Flash ROM) • Harness or connector [TCM power supply (back-up) circuit is open or shorted]

DTC CONFIRMATION PROCEDURE

1. PREPARATION BEFORE WORK

If another "DTC CONFIRMATION PROCEDURE" occurs just before, turn ignition switch OFF and wait for at least 10 seconds, then perform the next test.

>> GO TO 2.

2. CHECK DTC DETECTION

1. Start the engine.
2. Check the DTC.

Is “P062F” detected?

YES >> Go to TM-93, "Diagnosis Procedure".
NO >> INSPECTION END

Diagnosis Procedure

INFOID:0000000012404473

1. CHECK INTERMITTENT INCIDNT

Refer to GI-41, "Intermittent Incident".

Is the inspection result normal?

YES >> Replace the TCM. Refer to TM-192, "Removal and Installation".
NO >> Repair or replace malfunctioning parts.

cardiagn.com

P0705 TRANSMISSION RANGE SENSOR A

DTC Logic

INFOID:0000000012404474

DTC DETECTION LOGIC

DTC	CONSULT screen terms (Trouble diagnosis content)	DTC detection condition	Possible causes
P0705	T/M RANGE SENSOR A [Transmission Range Sensor A Circuit (PRNDL Input)]	When all of the following conditions are satisfied and this state is maintained for 2 seconds: • Two or more range signals simultaneously stay ON continuously • TCM power supply voltage: More than 11 V	• Harness or connector (Short circuit between transmission range switch and TCM) • Transmission range switch

DTC CONFIRMATION PROCEDURE

1. PREPARATION BEFORE WORK

If another "DTC CONFIRMATION PROCEDURE" occurs just before, turn ignition switch OFF and wait for at least 10 seconds, then perform the next test.

>> GO TO 2.

2. CHECK DTC DETECTION

1. Turn ignition switch ON.
2. Shift the selector lever through entire positions from “P” to “L”. (Hold the selector lever at each position for 5 seconds or more.)
3. Check the first trip DTC.

Is “P0705” detected?

YES >> Go to TM-94, "Diagnosis Procedure".
NO >> INSPECTION END

Diagnosis Procedure

INFOID:0000000012404475

1. CHECK TCM INPUT SIGNALS

With CONSULT
1. Turn ignition switch ON.
2. Select “Data Monitor” in “TRANSMISSION”.
3. Select “D POSITION SW”, “N POSITION SW”, “R POSITION SW”, “P POSITION SW” and “L RANGE SW”.
4. Shift the selector lever through entire positions from “P” to “L” and check ON/OFF of each monitor item.

Monitor item	Test condition	Condition
D POSITION SW	Selector lever: “D” position	On
	Other than the above	Off
N POSITION SW	Selector lever: “N” position	On
	Other than the above	Off
R POSITION SW	Selector lever: “R” position	On
	Other than the above	Off
P POSITION SW	Selector lever: “P” position	On
	Other than the above	Off
L RANGE SW	Selector lever: “L” position	On
	Other than the above	Off

Without CONSULT
1. Turn ignition switch OFF.
2. Disconnect TCM connector.

cardiagn.com

3. Turn ignition switch ON.
4. Shift the selector lever from “P” to “L” and check voltage between TCM harness connector terminals and ground.

+		–	Test condition	Voltage
TCM				
Connector	Terminal			
F23	2	Ground	Selector lever: “ L” position	10 – 16 V
			Other than the above	Approx. 0 V
	4		Selector lever: “D” position	10 – 16 V
			Other than the above	Approx. 0 V
	5		Selector lever: “N” position	10 – 16 V
			Other than the above	Approx. 0 V
	6		Selector lever: “R” position	10 – 16 V
			Other than the above	Approx. 0 V
	7		Selector lever: “P” position	10 – 16 V
			Other than the above	Approx. 0 V

Is the inspection result normal?

YES >> Check intermittent incident. Refer to GI-41, "Intermittent Incident".
NO-1 [“D POSITION SW” is “ON” when selector is not in “D” position. (Or connector terminal 4 is at power voltage.)]>>GO TO 2.
NO-2 [“N POSITION SW” is “ON” when selector is not in “N” position. (Or connector terminal 5 is at power voltage.)]>>GO TO 4.
NO-3 [“R POSITION SW” is “ON” when selector is not in “R” position. (Or connector terminal 6 is at power voltage.)]>>GO TO 6.
NO-4 [“P POSITION SW” is “ON” when selector is not in “P” position. (Or connector terminal 7 is at power voltage.)]>>GO TO 8.
NO-5 [“L POSITION SW” is “ON” when selector is not in “L” position. (Or connector terminal 2 is at power voltage.)]>>GO TO 10.

2. CHECK D POSITION SW CIRCUIT (PART 1)

1. Turn ignition switch OFF.
2. Disconnect TCM connector.
3. Check continuity between TCM harness connector terminals.

TCM			Continuity
Connector	Terminal		
F23	4	2	Not existed
		5	
		6	
		7	

Is the inspection result normal?

YES >> GO TO 3.
NO >> Repair or replace malfunctioning parts.

3. CHECK D POSITION SW CIRCUIT (PART 2)

1. Disconnect transmission range switch connector.
2. Turn ignition switch ON.
3. Check voltage between TCM harness connector terminal and ground.

cardiagn.com

+		–	Voltage
TCM			
Connector	Terminal		
F23	4	Ground	Approx. 0 V

Is the inspection result normal?

YES >> GO TO 12.
NO >> Repair or replace malfunctioning parts.

4. CHECK N POSITION SW CIRCUIT (PART 1)

1. Turn ignition switch OFF.
2. Disconnect TCM connector.
3. Check continuity between TCM harness connector terminals.

TCM			Continuity
Connector	Terminal		
F23	5	2	Not existed
		4	
		6	
		7	

Is the inspection result normal?

YES >> GO TO 5.
NO >> Repair or replace malfunctioning parts.

5. CHECK N POSITION SW CIRCUIT (PART 2)

1. Disconnect transmission range switch connector.
2. Turn ignition switch ON.
3. Check voltage between TCM harness connector terminal and ground.

+		–	Voltage
TCM			
Connector	Terminal		
F23	5	Ground	Approx. 0 V

Is the inspection result normal?

YES >> GO TO 12.
NO >> Repair or replace malfunctioning parts.

6. CHECK P POSITION SW CIRCUIT (PART 1)

1. Turn ignition switch OFF.
2. Disconnect TCM connector.
3. Check continuity between TCM harness connector terminals.

TCM			Continuity
Connector	Terminal		
F23	7	2	Not existed
		4	
		5	
		6	

Is the inspection result normal?

YES >> GO TO 7.
NO >> Repair or replace malfunctioning parts.

cardiagn.com

7. CHECK P POSITION SW CIRCUIT (PART 2)

1. Disconnect transmission range switch connector.
2. Turn ignition switch ON.
3. Check voltage between TCM harness connector terminal and ground.

+		–	Voltage
TCM			
Connector	Terminal		
F23	7	Ground	Approx. 0 V

Is the inspection result normal?

YES >> GO TO 12.
NO >> Repair or replace malfunctioning parts.

8. CHECK R POSITION SW CIRCUIT (PART1)

1. Turn ignition switch OFF.
2. Disconnect TCM connector.
3. Check continuity between TCM harness connector terminals.

TCM			Continuity
Connector	Terminal		
F23	6	2	Not existed
		4	
		5	
		7	

Is the inspection result normal?

YES >> GO TO 9.
NO >> Repair or replace malfunctioning parts.

9. CHECK R POSITION SW CIRCUIT (PART 2)

1. Disconnect transmission range switch connector.
2. Turn ignition switch ON.
3. Check voltage between TCM harness connector terminal and ground.

+		–	Voltage
TCM			
Connector	Terminal		
F23	6	Ground	Approx. 0 V

Is the inspection result normal?

YES >> GO TO 12.
NO >> Repair or replace malfunctioning parts.

10. CHECK DS POSITION SWITCH CIRCUIT (PART 1)

1. Turn ignition switch OFF.
2. Disconnect TCM connector.
3. Check continuity between TCM harness connector terminals.

cardiagn.com

TCM			Continuity
Connector	Terminal		
F23	2	4	Not existed
		5	
		6	
		7	

Is the inspection result normal?

YES >> GO TO 11.
NO >> Repair or replace malfunctioning parts.

11. CHECK DS POSITION SWITCH CIRCUIT (PART 2)

1. Disconnect transmission range switch connector.
2. Turn ignition switch ON.
3. Check voltage between TCM harness connector terminal and ground.

+		–	Voltage
TCM			
Connector	Terminal		
F23	2	Ground	Approx. 0 V

Is the inspection result normal?

YES >> GO TO 12.
NO >> Repair or replace malfunctioning parts.

12. CHECK TRANSMISSION RANGE SWITCH

Check transmission range switch. Refer to TM-98, "Component Inspection".

Is the check result normal?

YES >> Check intermittent incident. Refer to GI-41, "Intermittent Incident".
NO >> Repair or replace malfunctioning parts.

Component Inspection

INFOID:0000000012404476

1. CHECK TRANSMISSION RANGE SWITCH

Check continuity between transmission range switch connector terminals.

Transmission range switch	Condition	Continuity
Terminal		
1 – 2	Manual lever: “P” and “N” positions	Existed
	Other than the above	Not existed
3 – 4	Manual lever: “P” position	Existed
	Other than the above	Not existed
3 – 5	Manual lever: “R” position	Existed
	Other than the above	Not existed
3 – 6	Manual lever: “N position	Existed
	Other than the above	Not existed
3 – 7	Manual lever: “D” position	Existed
	Other than the above	Not existed
3 – 8	Manual lever: “L” position	Existed
	Other than the above	Not existed

Is the inspection result normal?

cardiagn.com

YES >> INSPECTION END
NO >> There is a malfunction of transmission range switch. Replace transaxle assembly. Refer to TM-215, "Removal and Installation".

cardiagn.com

P0706 TRANSMISSION RANGE SENSOR A

DTC Logic

INFOID:0000000012404477

DTC DETECTION LOGIC

DTC	CONSULT screen terms (Trouble diagnosis content)	DTC detection condition	Possible causes
P0706	T/M RANGE SENSOR A (Transmission Range Sensor A Circuit Range/Performance)	When all of the following conditions are satisfied and this state is maintained for 30 seconds: • All range signals stay OFF • TCM power supply voltage: More than 11 V	• Harness or connector (Open circuit between ignition switch and transmission range switch/open circuit between transmission range switch and TCM) • Transmission range switch • Control cable

DTC CONFIRMATION PROCEDURE

1. PREPARATION BEFORE WORK

If another "DTC CONFIRMATION PROCEDURE" occurs just before, turn ignition switch OFF and wait for at least 10 seconds, then perform the next test.

>> GO TO 2.

2. PERFORM DTC CONFIRMATION PROCEDURE

1. Turn ignition switch ON.
2. Shift the selector lever through entire positions from “P” to “L”. (Hold the selector lever at each position for 40 seconds or more.)
3. Check the first trip DTC.

Is “P0706” detected?

YES >> Go to TM-100, "Diagnosis Procedure".
NO >> INSPECTION END

Diagnosis Procedure

INFOID:0000000012404478

1. ADJUSTMENT OF CONTROL CABLE

Adjust control cable. Refer to TM-83, "Inspection and Adjustment".

>> GO TO 2.

2. PERFORM DTC CONFIRMATION PROCEDURE

With CONSULT
1. Turn ignition switch ON.
2. Select “Self Diagnostic Results” in “TRANSMISSION”.
3. Touch “Erase”.
4. Perform “DTC CONFIRMATION PROCEDURE". Refer to TM-100, "DTC Logic".

Is “P0706” detected?

YES >> GO TO 3.
NO >> INSPECTION END

3. CHECK POWER CIRCUIT

1. Turn ignition switch OFF.
2. Disconnect transmission range switch connector.
3. Turn ignition switch ON.
4. Check voltage between transmission range switch harness connector terminal and ground.

cardiagn.com

+		–	Voltage
Transmission range switch			
Connector	Terminal		
F17	3	Ground	10 – 16 V

Is the inspection result normal?

YES >> GO TO 4.
NO >> GO TO 7.

4. CHECK CIRCUIT BETWEEN TRANSMISSION RANGE SWITCH AND TCM (PART 1)

1. Turn ignition switch OFF.
2. Disconnect TCM connector.
3. Check continuity between transmission range switch harness connector terminals and TCM harness connector terminals.

Transmission range switch		TCM		Continuity
Connector	Terminal	Connector	Terminal	
F17	4	F23	7	Existed
	5		6	
	6		5	
	7		4	
	8		2	

Is the inspection result normal?

YES >> GO TO 5.
NO >> Repair or replace malfunctioning parts.

5. CHECK CIRCUIT BETWEEN TRANSMISSION RANGE SWITCH AND TCM (PART 2)

Check continuity between transmission range switch harness connector terminals and ground.

Transmission range switch		—	Continuity
Connector	Terminal		
F17	4	Ground	Not existed
	5		
	6		
	7		
	8		

Is the inspection result normal?

YES >> GO TO 6.
NO >> Repair or replace malfunctioning parts.

6. CHECK TRANSMISSION RANGE SWITCH

Check transmission range switch. Refer to TM-102, "Component Inspection".

Is the inspection result normal?

YES >> Check intermittent incident. Refer to GI-41, "Intermittent Incident".
NO >> Repair or replace malfunctioning parts.

7. CHECK CIRCUIT BETWEEN IPDM E/R AND TRANSMISSION RANGE SWITCH (PART 1)

1. Disconnect IPDM E/R connector.
2. Check continuity between IPDM E/R harness connector and transmission range switch.

cardiagn.com

IPDM E/R		Transmission range switch		Continuity
Connector	Terminal	Connector	Terminal	
F12	74	F17	3	Existed

Is the check result normal?

YES >> GO TO 8.
NO >> Repair or replace malfunctioning parts.

8. DETECT MALFUNCTIONING ITEMS

Check the following items:

- Harness open circuit or short circuit between ignition switch and IPDM E/R. Refer to PG-58, "Wiring Diagram - IGNITION POWER SUPPLY -".
- 10A fuse (No. 42, located in the IPDM E/R). Refer to PG-99, "Fuse, Connector and Terminal Arrangement".
- IPDM E/R

Is the check result normal?

YES >> Check intermittent incident. Refer to GI-41, "Intermittent Incident".
NO >> Repair or replace malfunctioning parts.

Component Inspection

INFOID:0000000012404479

1. CHECK TRANSMISSION RANGE SWITCH

Check continuity between transmission range switch connector terminals.

Transmission range switch Terminal	Condition	Continuity
1 – 2	Manual lever: “P” and “N” positions	Existed
	Other than the above	Not existed
3 – 4	Manual lever: “P” position	Existed
	Other than the above	Not existed
3 – 5	Manual lever: “R” position	Existed
	Other than the above	Not existed
3 – 6	Manual lever: “N position	Existed
	Other than the above	Not existed
3 – 7	Manual lever: “D” position	Existed
	Other than the above	Not existed
3 – 8	Manual lever: “L” position	Existed
	Other than the above	Not existed

Is the inspection result normal?

YES >> INSPECTION END
NO >> There is a malfunction of transmission range switch. Replace transaxle assembly. Refer to TM-215, "Removal and Installation".

cardiagn.com

P0711 TRANSMISSION FLUID TEMPERATURE SENSOR A

DTC Logic

INFOID:0000000012404480

DTC DETECTION LOGIC

DTC	CONSULT screen terms (Trouble diagnosis content)	DTC detection condition	Possible causes
P0711	FLUID TEMP SENSOR A (Transmission Fluid Temperature Sensor A Circuit Range/Performance)	When any of 1 or 2 is satisfied: 1. Under the following diagnosis conditions, CVT fluid temperature does not rise to 10°C (50°F) after driving for a certain period of time with the TCM-received fluid temperature sensor value between – 40°C (–40°F) and 9°C (48.2°F). - TCM power supply voltage: More than 11 V - CAN communication is normal - Engine speed: 450 rpm or more - Accelerator pedal position: 3 deg. or more - Vehicle speed: 10 km/h (7 MPH) or more - U0100, P0705 and P0706 are not detected. - Selector lever: “D” position 2. When the condition of the final judgment is satisfied after satisfying that of the provisional judgment: - Provisional judgment: All of the following conditions are satisfied within 2 seconds after the ignition switch is turned ON. • U0073, U0100, P0712 and P0713 are not detected. • CAN communication is normal. • TCM power supply voltage: More than 11 V • The difference between CVT fluid temperature and engine coolant temperature is 55°C (131°F) or more, or –27°C (–16°F) or less. - Final judgment: When all of the following conditions are satisfied and this state is maintained for 300 seconds: • ECM is normal. • Provisional judgment is satisfied.	CVT fluid temperature sensor

DTC CONFIRMATION PROCEDURE

CAUTION:

Always drive vehicle at a safe speed.

1. PREPARATION BEFORE WORK

If another "DTC CONFIRMATION PROCEDURE" occurs just before, turn ignition switch OFF and wait for at least 10 seconds, then perform the next test.

>> GO TO 2.

2. INSPECTION START

Is it necessary to erase permanent DTC?

YES >> GO TO 3.
NO >> GO TO 7.

3. CHECK DTC (ECM AND TCM)

Check the DTC.

Is any DTC other than “P0711” detected?

YES >> Check DTC detected item. Refer to EC-103, "DTC Index" (ECM), TM-59, "DTC Index" (TCM).
NO >> GO TO 4.

cardiagn.com

4. PERFORM DTC CONFIRMATION PROCEDURE (PART 1)

TESTING CONDITION:
- **While performing the following procedure, do not add fuel.**
- **Before performing the following procedure, check that fuel level is between 1/4 and 4/4.**
- **Before performing the following procedure, confirm that battery voltage is 11 V or more at idle.**

With CONSULT
1. Move the vehicle to a cool place.
   NOTE:
   Cool the vehicle in an environment of ambient air temperature between –10°C (14°F) and 35°C (95°F).
2. Turn ignition switch OFF and leave the vehicle for 12 hours.
   CAUTION:
   Never turn ignition switch ON during this procedure.
   NOTE:
   The vehicle must be cooled with the food open.
3. Turn ignition switch ON.
   CAUTION:
   Never start the engine.
4. Select “Data Monitor” in “TRANSMISSION”.
5. Select “FLUID TEMP”.
6. Record CVT fluid temperature.
7. Start engine and let it idle for 5 minutes or more.
   CAUTION:
   Never turn ignition switch OFF during idling.
8. Check 1st trip DTC.

With GST
1. Move the vehicle to a cool place.
   NOTE:
   Cool the vehicle in an environment of ambient air temperature between –10°C (14°F) and 35°C (95°F).
2. Turn ignition switch OFF and leave the vehicle for 12 hours.
   CAUTION:
   Never turn ignition switch ON during this procedure.
   NOTE:
   The vehicle must be cooled with the food open.
3. Start engine and let it idle for 5 minutes or more.
   CAUTION:
   Never turn ignition switch OFF during idling.
4. Check 1st trip DTC.

Is “P0711” detected?

YES >> Go to TM-106, "Diagnosis Procedure".
NO-1 (With CONSULT)>>GO TO 5.
NO-2 (With GST)>>GO TO 6.

5. CHECK CVT FLUID TEMPERATURE

With CONSULT
1. Select “Data Monitor” in “TRANSMISSION”.
2. Select “FLUID TEMP”.

Is the value of “FLUID TEMP” 10°C (50°F) or more?

YES >> INSPECTION END
NO >> GO TO 6.

6. PERFORM DTC CONFIRMATION PROCEDURE (PART 2)

With CONSULT
1. Drive the vehicle for the total minutes specified in the Driving time column below with the following conditions satisfied.

Selector lever	: “D” position
Accelerator pedal position	: 1.0/8 or more
Vehicle speed	: 10 km/h (7 MPH) or more

cardiagn.com

CVT fluid temperature before engine start	Driving time
–40°C (–40°F) – –31°C (–23.8°F)	20 minutes or more
–30°C (–22°F) – –21°C (–5.8°F)	18 minutes or more
–20°C (–4°F) – –11°C (–12.2°F)	14 minutes or more
–10°C (14°F) – –1°C (30.2°F)	10 minutes or more
0°C (32°F) – 9°C (48.2°F)	7 minutes or more

2. Stop the vehicle.
3. Check the first trip DTC.

With GST

1. Drive the vehicle and maintain the following conditions for 20 minutes or more.

Selector lever	: “D” position
Accelerator pedal position	: 1.0/8 or more
Vehicle speed	: 10 km/h (7 MPH) or more

2. Stop the vehicle.
3. Check the first trip DTC.

Is “P0711” detected?

YES >> Go to TM-106, "Diagnosis Procedure".
NO >> INSPECTION END

7. PERFORM DTC CONFIRMATION PROCEDURE

With CONSULT

1. Turn ignition switch OFF and cool the engine.
2. Turn ignition switch ON.
   CAUTION:
   Never start the engine.
3. Select “Data Monitor” in “TRANSMISSION”.
4. Select “FLUID TEMP”.
5. Record CVT fluid temperature.
6. Start the engine and wait for at least 2 minutes.
7. Drive the vehicle for the total minutes specified in the Driving time column below with the following conditions satisfied.

Selector lever	: “D” position
Accelerator pedal position	: 1.0/8 or more
Vehicle speed	: 10 km/h (7 MPH) or more

CVT fluid temperature before engine start	Driving time
–40°C (–40°F) – –31°C (–23.8°F)	20 minutes or more
–30°C (–22°F) – –21°C (–5.8°F)	18 minutes or more
–20°C (–4°F) – –11°C (–12.2°F)	14 minutes or more
–10°C (14°F) – –1°C (30.2°F)	10 minutes or more
0°C (32°F) – 9°C (48.2°F)	7 minutes or more
Other than the above	— (Go to “8. CHECK CVT FLUID TEMPERATURE SENSOR”)

8. Stop the vehicle.
9. Check the first trip DTC.

With GST

1. Turn ignition switch OFF and cool the engine.
2. Start the engine and wait for at least 2 minutes.
3. Drive the vehicle and maintain the following conditions for 20 minutes or more.

cardiagn.com

Selector lever	: “D” position
Accelerator pedal position	: 1.0/8 or more
Vehicle speed	: 10 km/h (7 MPH) or more

4. Stop the vehicle.
   CAUTION:
   Never turn ignition switch OFF
5. Check the first trip DTC.

Is “P0711” detected?

YES >> Go to TM-106, "Diagnosis Procedure".
NO >> GO TO 8.

8. CHECK CVT FLUID TEMPERATURE SENSOR

1. Turn ignition switch OFF.
2. Disconnect CVT unit connector.
3. Check resistance between CVT unit connector terminals.

CVT unit		Condition	Resistance (Approx.)
Connector	Terminal		
F250	18 – 12	CVT fluid temperature: 20°C (68°F)	6.5 kΩ
		CVT fluid temperature: 50°C (122°F)	2.2 kΩ
		CVT fluid temperature: 80°C (176°F)	0.87 kΩ

Is the inspection result normal?

YES >> INSPECTION END
NO >> There is a malfunction of CVT fluid temperature sensor. Replace terminal cord assembly. Refer to TM-194, "Removal and Installation".

Diagnosis Procedure

INFOID:0000000012404481

1. CHECK CVT FLUID TEMPERATURE SENSOR

1. Turn ignition switch OFF.
2. Disconnect CVT unit connector.
3. Check resistance between CVT unit connector terminals.

CVT unit		Condition	Resistance (Approx.)
Connector	Terminal		
F250	18 – 12	CVT fluid temperature: 20°C (68°F)	6.5 kΩ
		CVT fluid temperature: 50°C (122°F)	2.2 kΩ
		CVT fluid temperature: 80°C (176°F)	0.87 kΩ

Is the inspection result normal?

YES >> GO TO 2.
NO >> GO TO 4.

2. CHECK CIRCUIT BETWEEN TCM AND CVT UNIT (CVT FLUID TEMPERATURE SENSOR) (PART 1)

1. Disconnect the TCM connector.
2. Check continuity between TCM harness connector terminals and CVT unit harness connector terminals.

TCM		CVT unit		Continuity
Connector	Terminal	Connector	Terminal	
F23	11	F24	18	Existed
	12		12	

Is the inspection result normal?

cardiagn.com

YES >> GO TO 3.
NO >> Repair or replace damaged parts.

3. CHECK CIRCUIT BETWEEN TCM AND CVT UNIT (CVT FLUID TEMPERATURE SENSOR) (PART 2)

Check continuity between TCM harness connector terminals and ground.

TCM		Ground	Continuity
Connector	Terminal		
F23	11	Ground	Not existed
	12		

Is the inspection result normal?

YES >> Check intermittent incident. Refer to GI-41, "Intermittent Incident".
NO >> Repair or replace damaged parts.

4. CHECK TERMINAL CORD ASSEMBLY (PART 1)

1. Remove terminal cord assembly. Refer to TM-193, "Exploded View".
2. Check continuity between CVT unit harness connector terminals and control valve harness connector terminals.

CVT unit		Control valve		Continuity
Connector	Terminal	Connector	Terminal	
F250	18	F251	13	Existed
	12		5	

Is the inspection result normal?

YES >> GO TO 5.
NO >> Repair or replace damaged parts.

5. CHECK TERMINAL CORD ASSEMBLY (PART 2)

Check terminal cord assembly harness cladding for damage.

Is the inspection result normal?

YES >> GO TO 6.
NO >> Repair or replace damaged parts.

6. CHECK DTC (TCM)

With CONSULT

1. Perform “DTC CONFIRMATION PROCEDURE”. Refer to TM-103, "DTC Logic".
2. Select “Self Diagnostic Results” in “TRANSMISSION”.

Is “P0710” detected?

YES >> There is a malfunction of the CVT fluid temperature sensor. Replace the transaxle assembly. Refer to TM-215, "Removal and Installation".
NO >> Check intermittent incident. Refer to GI-41, "Intermittent Incident".

cardiagn.com

P0712 TRANSMISSION FLUID TEMPERATURE SENSOR A

DTC Logic

INFOID:0000000012404482

DTC DETECTION LOGIC

DTC	CONSULT screen terms (Trouble diagnosis content)	DTC detection condition	Possible causes
P0712	FLUID TEMP SENSOR A (Transmission Fluid Temperature Sensor A Circuit Low)	When all of the following conditions are satisfied and this state is maintained for 5 seconds: • TCM power supply voltage : More than 11 V • Fluid temperature sensor detection voltage: 0.15 V or less	• Harness or connector (CVT fluid temperature sensor circuit is shorted to ground) • CVT fluid temperature sensor

DTC CONFIRMATION PROCEDURE

1.PREPARATION BEFORE WORK

If another "DTC CONFIRMATION PROCEDURE" occurs just before, turn ignition switch OFF and wait for at least 10 seconds, then perform the next test.

>> GO TO 2.

2.PERFORM DTC CONFIRMATION PROCEDURE

1. Start the engine and wait for 10 seconds or more.
2. Check the first trip DTC.

Is “P0712” detected?

YES >> Go to TM-108, "Diagnosis Procedure".
NO >> INSPECTION END

Diagnosis Procedure

INFOID:0000000012404483

1.CHECK CIRCUIT BETWEEN TCM AND CVT UNIT

1. Turn ignition switch OFF.
2. Disconnect TCM connector and CVT unit connector.
3. Check continuity between TCM harness connector terminal and ground.

TCM		—	Continuity
Connector	Terminal		
F23	12	Ground	Not existed

Is the inspection result normal?

YES >> GO TO 2.
NO >> Repair or replace malfunctioning part.

2.CHECK CVT FLUID TEMPERATURE SENSOR

Check CVT fluid temperature sensor. Refer to TM-108, "Component Inspection".

Is the inspection result normal?

YES >> Check intermittent incident. Refer to GI-41, "Intermittent Incident".
NO >> Repair or replace malfunctioning parts.

Component Inspection

INFOID:0000000012404484

1.CHECK CVT FLUID TEMPERATURE SENSOR

Check resistance between CVT unit connector terminals.

cardiagn.com

CVT unit Terminal	Condition	Resistance
18 – 12	CVT fluid temperature: 20°C (68°F)	Approx. 6.5 kΩ
	CVT fluid temperature: 50°C (122°F)	Approx. 2.2 kΩ
	CVT fluid temperature: 80°C (176°F)	Approx. 0.87 kΩ

Is the inspection result normal?

YES >> INSPECTION END
NO >> There is a malfunction of CVT fluid temperature sensor. Replace terminal code assembly. Refer to TM-194, "Removal and Installation".

cardiagn.com

P0713 TRANSMISSION FLUID TEMPERATURE SENSOR A

DTC Logic

INFOID:0000000012404485

DTC DETECTION LOGIC

DTC	CONSULT screen terms (Trouble diagnosis content)	DTC detection condition	Possible causes
P0713	FLUID TEMP SENSOR A (Transmission Fluid Temperature Sensor A Circuit High)	When all of the following conditions are satisfied and this state is maintained for 5 seconds: • TCM power supply voltage: More than 11 V • Vehicle speed: More than 10 km/h (7 MPH) • Fluid temperature sensor detection voltage: 2.48 V or more	• Harness or connector (CVT fluid temperature sensor circuit is open or shorted to power supply) • CVT fluid temperature sensor

DTC CONFIRMATION PROCEDURE

1. PREPARATION BEFORE WORK

If another "DTC CONFIRMATION PROCEDURE" occurs just before, turn ignition switch OFF and wait for at least 10 seconds, then perform the next test.

>> GO TO 2.

2. PERFORM DTC CONFIRMATION PROCEDURE

1. Start the engine.
2. Maintain the following condition for 10 seconds or more.

Vehicle speed : 20 km/h (12 MPH) or more

3. Stop the vehicle.
4. Check the first trip DTC.

Is “P0713” detected?

YES >> Go to TM-110, "Diagnosis Procedure".
NO >> INSPECTION END

Diagnosis Procedure

INFOID:0000000012404486

1. CHECK CIRCUIT BETWEEN TCM AND CVT UNIT (PART 1)

1. Turn ignition switch OFF.
2. Disconnect TCM connector and CVT unit connector.
3. Check continuity between TCM harness connector terminals and CVT unit harness connector terminals.

TCM		CVT unit		Continuity
Connector	Terminal	Connector	Terminal	
F23	11	F24	18	Existed
	12		12	

Is the inspection result normal?

YES >> GO TO 2.
NO >> Repair or replace malfunctioning parts.

2. CHECK CIRCUIT BETWEEN TCM AND CVT UNIT (PART 2)

1. Turn ignition switch ON.
2. Check voltage between TCM harness connector terminal and ground.

cardiagn.com

+		-	Voltage
TCM			
Connector	Terminal		
F23	12	Ground	Approx. 0 V

Is the inspection result normal?

YES >> GO TO 3.
NO >> Repair or replace malfunctioning parts.

3. CHECK CVT FLUID TEMPERATURE SENSOR

Check CVT fluid temperature sensor. Refer to TM-111, "Component Inspection".

Is the inspection result normal?

YES >> Check intermittent incident. Refer to GI-41, "Intermittent Incident".
NO >> Repair or replace malfunctioning parts.

Component Inspection

INFOID:0000000012404487

1. CHECK CVT FLUID TEMPERATURE SENSOR

Check resistance between CVT unit connector terminals.

CVT unit Terminal	Condition	Resistance
18 – 12	CVT fluid temperature: 20°C (68°F)	Approx. 6.5 kΩ
	CVT fluid temperature: 50°C (122°F)	Approx. 2.2 kΩ
	CVT fluid temperature: 80°C (176°F)	Approx. 0.87 kΩ

Is the inspection result normal?

YES >> INSPECTION END
NO >> There is a malfunction of CVT fluid temperature sensor. Replace terminal code assembly. Refer to TM-194, "Removal and Installation".

cardiagn.com

P0715 INPUT SPEED SENSOR A

DTC Logic

INFOID:0000000012404488

DTC DETECTION LOGIC

DTC	CONSULT screen terms (Trouble diagnosis content)	DTC detection condition	Possible causes
P0715	INPUT SPEED SENSOR A (Input/Turbine Speed Sensor A Circuit)	When 1 is satisfied and any of 2, 3 or 4 is satisfied: 1. When the following conditions are satisfied: - TCM power supply voltage: More than 11 V - After range change completion, it spends 2 seconds or more. 2. When all of the following conditions are satisfied and this state is maintained for 5 seconds: - Primary pulley speed: Less than 150 rpm - Secondary pulley speed: 500 rpm or more 3. When all of the following conditions are satisfied and this state is maintained for 0.5 seconds: - 10-msec-ago primary pulley speed: 1,000 rpm or more - Now primary pulley speed: 0 rpm 4. When all of the following conditions are satisfied and this state is maintained for 5 seconds: - Range: D or DS - Engine speed: 450 rpm or more - Input peed: 300 rpm or more - Primary pulley speed: 300 rpm or more - Secondary pulley seed: 300 rpm or more - Differences between engine speed and primary pulley speed: More than 1,000 rpm - Differences between primary pulley speed and input speed speed: More than 1,000 rpm - Differences between engine speed and input speed speed: 1,000 rpm or less - Lock-up command is being given (except for slip lock-up) - DTC other than the applicable DTC is not detected.	• Harness or connector (Primary speed sensor circuit is open or shorted) • Primary speed sensor

DTC CONFIRMATION PROCEDURE

CAUTION:

Be careful of the driving speed.

1. PREPARATION BEFORE WORK

If another "DTC CONFIRMATION PROCEDURE" occurs just before, turn ignition switch OFF and wait for at least 10 seconds, then perform the next test.

>> GO TO 2.

2. CHECK DTC DETECTION

1. Start the engine.
2. Drive the vehicle.
3. Maintain the following conditions for 10 seconds or more.

Selector lever	: “D” POSITION
Engine speed	: 1,200 rpm or more
Vehicle speed	: 40 km/h (25 MPH) or more

4. Stop the vehicle.
5. Check the first trip DTC.

Is “P0715” detected?

cardiagn.com

YES >> Go to TM-113, "Diagnosis Procedure".
NO >> INSPECTION END

Diagnosis Procedure

INFOID:0000000012404489

1. CHECK PRIMARY SPEED SENSOR POWER CIRCUIT

1. Turn ignition switch OFF.
2. Disconnect primary speed sensor connector.
3. Turn ignition switch ON.
4. Check voltage between primary speed sensor harness connector terminal and ground.

+		–	Voltage
Primary speed sensor			
Connector	Terminal		
F16	3	Ground	10 – 16 V

Is the inspection result normal?

YES >> GO TO 2.
NO >> GO TO 6.

2. CHECK PRIMARY SPEED SENSOR GROUND CIRCUIT

Check continuity between primary speed sensor harness connector terminal and ground.

Primary speed sensor		—	Continuity
Connector	Terminal		
F16	1	Ground	Existed

Is the inspection result normal?

YES >> GO TO 3.
NO >> Repair or replace malfunctioning parts.

3. CHECK CIRCUIT BETWEEN PRIMARY SPEED SENSOR AND TCM (PART 1)

1. Turn ignition switch OFF.
2. Disconnect TCM connector.
3. Check continuity between primary speed sensor harness connector terminal and TCM harness connector terminal.

Primary speed sensor		TCM		Continuity
Connector	Terminal	Connector	Terminal	
F16	2	F23	35	Existed

Is the inspection result normal?

YES >> GO TO 4.
NO >> Repair or replace malfunctioning parts.

4. CHECK CIRCUIT BETWEEN PRIMARY SPEED SENSOR AND TCM (PART 2)

Check continuity between primary speed sensor harness connector terminal and ground.

Primary speed sensor		—	Continuity
Connector	Terminal		
F16	2	Ground	Not existed

Is the inspection result normal?

YES >> GO TO 5.
NO >> Repair or replace malfunctioning parts.

5. CHECK TCM INPUT SIGNALS

cardiagn.com

1. Connect all of disconnected connectors.
2. Lift the vehicle.
3. Start the engine.
4. Check frequency of primary speed sensor.

+		–	Condition	Standard
TCM				
Connector	Terminal			
F23	35	Ground	• Selector lever: “L” position • Vehicle speed: 20 km/h (12 MPH)	Approx. 700 Hz 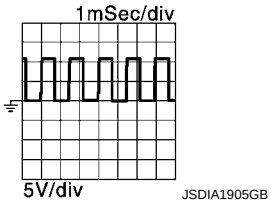

Is the inspection result normal?

YES >> Check intermittent incident. Refer to GI-41, "Intermittent Incident".
NO >> Replace primary speed sensor. Refer to TM-202, "Removal and Installation".

6. DETECT MALFUNCTIONING ITEMS

Check the following items:

- Harness open circuit or short circuit between ignition switch and IPDM E/R. Refer to PG-58, "Wiring Diagram - IGNITION POWER SUPPLY -".
- Harness open circuit or short circuit between primary speed sensor and IPDM E/R.
- 10A fuse (No.43, located in the IPDM E/R). Refer to PG-99, "Fuse, Connector and Terminal Arrangement".
- IPDM E/R

Is the check result normal?

YES >> Check intermittent incident. Refer to GI-41, "Intermittent Incident".
NO >> Repair or replace malfunctioning parts.

cardiagn.com

P0717 INPUT SPEED SENSOR A

DTC Logic

INFOID:0000000012404490

DTC DETECTION LOGIC

DTC	CONSULT screen terms (Trouble diagnosis content)	DTC detection condition	Possible cause
P0717	INPUT SPEED SENSOR A (Input/Turbine Speed Sensor “A” Circuit No Signal)	When 1 is satisfied and any of 2, 3 or 4 is satisfied: 1. When the following conditions are satisfied: - TCM power supply voltage: More than 11 V - After range change completion, it spends 2 seconds or more. 2. When all of the following conditions are satisfied and this state is maintained for 5 seconds: - Primary pulley speed: 500 rpm or more - Input speed: Less than 150 rpm - Range: Other than P, N - P0715 is not detected 3. When all of the following conditions are satisfied and this state is maintained for 0.5 seconds: - 10-msec-ago input speed: 1,000 rpm or more - Now input speed: 0 rpm 4. When all of the following conditions are satisfied and this state is maintained for 5 seconds: - Range: D or L - Engine speed: 450 rpm or more - Input peed: 300 rpm or more - Primary pulley speed: 300 rpm or more - Secondary pulley seed: 300 rpm or more - Differences between engine speed and primary pulley speed: 1,000 rpm or less - Differences between primary pulley speed and input speed speed: More than 1,000 rpm - Differences between engine speed and input speed speed: More than 1,000 rpm - Lock-up command is being given (except for slip lock-up) - DTC other than the applicable DTC is not detected.	• Harness or connectors (Input speed sensor circuit is open or shorted.) • Input speed sensor

DTC CONFIRMATION PROCEDURE

CAUTION:

Always drive vehicle at a safe speed.

1. PREPARATION BEFORE WORK

If another “DTC CONFIRMATION PROCEDURE” occurs just before, turn ignition switch OFF and wait for at least 10 seconds, then perform the next test.

>> GO TO 2.

2. CHECK DTC DETECTION

With CONSULT

1. Start the engine.
2. Drive the vehicle.
3. Maintain the following conditions for 10 seconds or more.

Selector lever : “D” position

cardiagn.com

Engine speed : 1,200 rpm or more
Vehicle speed : 40 km/h (25 MPH) or more

4. Stop the vehicle.
5. Check the first trip DTC.

Is “P0717” detected?

YES >> Go to TM-116, "Diagnosis Procedure".
NO >> INSPECTION END

Diagnosis Procedure

INFOID:0000000012404491

1. CHECK INPUT SPEED SENSOR POWER CIRCUIT

1. Turn ignition switch OFF.
2. Disconnect input speed sensor connector.
3. Turn ignition switch ON.
4. Check voltage between input speed sensor harness connector terminal and ground.

+		–	Voltage
Input speed sensor			
Connector	Terminal		
F21	3	Ground	10 – 16 V

Is the inspection result normal?

YES >> GO TO 2.
NO >> GO TO 6.

2. CHECK INPUT SPEED SENSOR GROUND CIRCUIT

Check continuity between input speed sensor harness connector terminal and ground.

Input speed sensor		—	Continuity
Connector	Terminal		
F21	1	Ground	Existed

Is the inspection result normal?

YES >> GO TO 3.
NO >> Repair or replace malfunctioning parts.

3. CHECK CIRCUIT BETWEEN INPUT SPEED SENSOR AND TCM (PART 1)

1. Turn ignition switch OFF.
2. Disconnect TCM connector.
3. Check continuity between input speed sensor harness connector terminal and TCM harness connector terminal.

Input speed sensor		TCM		Continuity
Connector	Terminal	Connector	Terminal	
F21	2	F23	24	Existed

Is the inspection result normal?

YES >> GO TO 4.
NO >> Repair or replace malfunctioning parts.

4. CHECK CIRCUIT BETWEEN INPUT SPEED SENSOR AND TCM (PART 2)

Check continuity between input speed sensor harness connector terminal and ground.

cardiagn.com

Input speed sensor		—	Continuity
Connector	Terminal		
F21	2	Ground	Not existed

Is the inspection result normal?

YES >> GO TO 5.
NO >> Repair or replace malfunctioning parts.

5. CHECK TCM INPUT SIGNALS

1. Connect all of disconnected connectors.
2. Lift the vehicle.
3. Start the engine.
4. Check frequency of input speed sensor.

+		–	Condition	Standard
TCM				
Connector	Terminal			
F23	24	Ground	• Selector lever: “L” position • Vehicle speed: 20 km/h (12 MPH)	Approx. 880 Hz 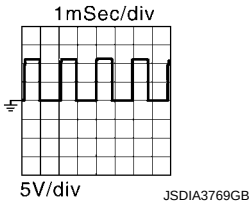

Is the inspection result normal?

YES >> Check intermittent incident. Refer to GI-41, "Intermittent Incident".
NO >> Replace input speed sensor. Refer to TM-200, "Removal and Installation".

6. DETECT MALFUNCTIONING ITEMS

Check the following items:

- Harness open circuit or short circuit between ignition switch and IPDM E/R. Refer to PG-58, "Wiring Diagram - IGNITION POWER SUPPLY -".
- Harness open circuit or short circuit between input speed sensor and IPDM E/R.
- 10A fuse (No.43, located in the IPDM E/R). Refer to PG-99, "Fuse, Connector and Terminal Arrangement".
- IPDM E/R

Is the check result normal?

YES >> Check intermittent incident. Refer to GI-41, "Intermittent Incident".
NO >> Repair or replace malfunctioning parts.

cardiagn.com

P0740 TORQUE CONVERTER

DTC Logic

INFOID:0000000012404492

DTC DETECTION LOGIC

DTC	CONSULT screen terms (Trouble diagnosis content)	DTC detection condition	Possible causes
P0740	TORQUE CONVERTER (Torque Converter Clutch Circuit/Open)	When all of the following conditions are satisfied and this state is maintained for 5 seconds: • TCM power supply voltage: More than 11 V • P0743 is not detected. • TCM judges that solenoid valve circuit is open.	• Harness or connector (Torque converter clutch solenoid valve circuit is open or shorted to power supply) • Torque converter clutch solenoid valve

DTC CONFIRMATION PROCEDURE

CAUTION:

Be careful of the driving speed.

1. PREPARATION BEFORE WORK

If another "DTC CONFIRMATION PROCEDURE" occurs just before, turn ignition switch OFF and wait for at least 10 seconds, then perform the next test.

>> GO TO 2.

2. PREPARATION BEFORE OPERATION

With CONSULT

1. Start the engine.
2. Select “Data Monitor” in “TRANSMISSION”.
3. Select “FLUID TEMP”.
4. Confirm that the CVT fluid temperature is in the following range.

FLUID TEMP	: 20°C (68°F) or more

With GST

1. Start the engine.
2. Set the CVT fluid to 20°C (68°F) or more.
   NOTE:
   When the ambient temperature is 20°C (68°F), the CVT fluid usually increases to 50 to 80°C (122 to 176°F) with driving in an urban area for approximately 10 minutes.

Is the CVT fluid 20°C (68°F) or more?

YES >> GO TO 3.
NO >> 1. Warm the transaxle.
2. GO TO 3.

3. CHECK DTC DETECTION

1. Drive the vehicle.
2. Maintain the following conditions for 10 seconds or more.

Selector lever	: “D” position
Vehicle speed	: 40 km/h (25 MPH) or more

3. Stop the vehicle.
4. Check the first trip DTC.

Is “P0740” detected?

YES >> Go to TM-119, "Diagnosis Procedure".
NO >> INSPECTION END

cardiagn.com

Diagnosis Procedure

INFOID:0000000012404493

1. CHECK CIRCUIT BETWEEN TCM AND CVT UNIT

1. Turn ignition switch OFF.
2. Disconnect TCM connector and CVT unit connector.
3. Check continuity between TCM harness connector terminal and CVT unit harness connector terminal.

TCM		CVT unit		Continuity
Connector	Terminal	Connector	Terminal	
F23	38	F24	5	Existed

Is the inspection result normal?

YES >> GO TO 2.
NO >> Repair or replace malfunctioning parts.

2. CHECK CIRCUIT BETWEEN CVT UNIT AND GROUND

Check resistance between CVT unit harness connector terminal and ground.

CVT unit		—	Condition	Resistance
Connector	Terminal			
F250	5	Ground	CVT fluid temperature: 20°C (68°F)	5.5 – 7.0 Ω
			CVT fluid temperature: 50°C (122°F)	6.0 – 8.0 Ω
			CVT fluid temperature: 80°C (176°F)	6.5 – 8.5 Ω

Is the inspection result normal?

YES >> Check intermittent incident. Refer to GI-41, "Intermittent Incident".
NO >> GO TO 3.

3. CHECK CIRCUIT BETWEEN CVT UNIT AND CONTROL VALVE

1. Disconnect control valve connector. Refer to TM-193, "Exploded View".
2. Check continuity between CVT unit harness connector terminal and control valve harness connector terminal.

CVT unit		Control valve		Continuity
Connector	Terminal	Connector	Terminal	
F250	5	F251	3	Existed

Is the inspection result normal?

YES >> GO TO 4.
NO >> Replace terminal code assembly. Refer to TM-194, "Removal and Installation".

4. CHECK CIRCUIT BETWEEN CONTROL VALVE AND GROUND

Check resistance between control valve harness connector terminal and ground.

Control valve	—	Condition	Resistance
Terminal			
3	Ground	CVT fluid temperature: 20°C (68°F)	5.5 – 7.0 Ω
		CVT fluid temperature: 50°C (122°F)	6.0 – 8.0 Ω
		CVT fluid temperature: 80°C (176°F)	6.5 – 8.5 Ω

Is the inspection result normal?

YES >> Check intermittent incident. Refer to GI-41, "Intermittent Incident".
NO >> There is malfunction of torque converter clutch solenoid valve. Replace transaxle assembly. Refer to TM-215, "Removal and Installation".

cardiagn.com

P0743 TORQUE CONVERTER

DTC Logic

INFOID:0000000012404494

DTC DETECTION LOGIC

DTC	CONSULT screen terms (Trouble diagnosis content)	DTC detection condition	Possible causes
P0743	TORQUE CONVERTER (Torque Converter Clutch Circuit Electrical)	When all of the following conditions are satisfied and this state is maintained for 0.48 seconds: • TCM power supply voltage: More than 11 V • TCM judges that solenoid valve circuit is shorted to ground.	• Harness or connector (Torque converter clutch solenoid valve circuit is shorted to ground) • Torque converter clutch solenoid valve

DTC CONFIRMATION PROCEDURE

CAUTION:

Be careful of the driving speed.

1. PREPARATION BEFORE WORK

If another "DTC CONFIRMATION PROCEDURE" occurs just before, turn ignition switch OFF and wait for at least 10 seconds, then perform the next test.

>> GO TO 2.

2. PREPARATION BEFORE OPERATION

With CONSULT

1. Start the engine.
2. Select “Data Monitor” in “TRANSMISSION”.
3. Select “FLUID TEMP”.
4. Confirm that the CVT fluid temperature is in the following range.

FLUID TEMP	: 20°C (68°F) or more

With GST

1. Start the engine.
2. Set the CVT fluid to 20°C (68°F) or more.
   NOTE:
   When the ambient temperature is 20°C (68°F), the CVT fluid usually increases to 50 to 80°C (122 to 176°F) with driving in an urban area for approximately 10 minutes.

Is the CVT fluid 20°C (68°F) or more?

YES >> GO TO 3.
NO >> 1. Warm the transaxle.
2. GO TO 3.

3. CHECK DTC DETECTION

1. Drive the vehicle.
2. Maintain the following conditions for 10 seconds or more.

Selector lever	: “D” position
Vehicle speed	: 40 km/h (25 MPH) or more

3. Stop the vehicle.
4. Check the first trip DTC.

Is “P0743” detected?

YES >> Go to TM-121, "Diagnosis Procedure".
NO >> INSPECTION END

cardiagn.com

Diagnosis Procedure

INFOID:0000000012404495

1. CHECK CIRCUIT BETWEEN TCM AND CVT UNIT

1. Turn ignition switch OFF.
2. Disconnect TCM connector and CVT unit connector.
3. Check continuity between TCM harness connector terminal and ground.

TCM		—	Continuity
Connector	Terminal		
F23	38	Ground	Not existed

Is the inspection result normal?

YES >> GO TO 2.
NO >> Repair or replace malfunctioning parts.

2. CHECK CIRCUIT BETWEEN CVT UNIT AND GROUND

Check resistance between CVT unit harness connector terminal and ground.

CVT unit		—	Condition	Resistance
Connector	Terminal			
F250	5	Ground	CVT fluid temperature: 20°C (68°F)	5.5 – 7.0 Ω
			CVT fluid temperature: 50°C (122°F)	6.0 – 8.0 Ω
			CVT fluid temperature: 80°C (176°F)	6.5 – 8.5 Ω

Is the inspection result normal?

YES >> Check intermittent incident. Refer to GI-41, "Intermittent Incident".
NO >> GO TO 3.

3. CHECK CIRCUIT BETWEEN CVT UNIT AND CONTROL VALVE

1. Disconnect control valve connector. Refer to TM-193, "Exploded View".
2. Check continuity between CVT unit harness connector terminal and control valve harness connector terminal.

CVT unit		Control valve		Continuity
Connector	Terminal	Connector	Terminal	
F250	5	F251	3	Existed

Is the inspection result normal?

YES >> GO TO 4.
NO >> Replace terminal code assembly. Refer to TM-194, "Removal and Installation".

4. CHECK CIRCUIT BETWEEN CONTROL VALVE AND GROUND

Check resistance between control valve harness connector terminal and ground.

Control valve	—	Condition	Resistance
Terminal			
3	Ground	CVT fluid temperature: 20°C (68°F)	5.5 – 7.0 Ω
		CVT fluid temperature: 50°C (122°F)	6.0 – 8.0 Ω
		CVT fluid temperature: 80°C (176°F)	6.5 – 8.5 Ω

Is the inspection result normal?

YES >> Check intermittent incident. Refer to GI-41, "Intermittent Incident".
NO >> There is malfunction of torque converter clutch solenoid valve. Replace transaxle assembly. Refer to TM-215, "Removal and Installation".

cardiagn.com

P0744 TORQUE CONVERTER

DTC Logic

INFOID:0000000012404496

DTC DETECTION LOGIC

DTC	CONSULT screen terms (Trouble diagnosis content)	DTC detection condition	Possible causes
P0744	TORQUE CONVERTER (Torque converter clutch circuit intermittent)	When all of the following conditions are satisfied and this state is maintained for 30 seconds: • TCM power supply voltage: More than 11 V • P0717 is not detected. • CAN communication is normal • Torque converter slip speed: (40+vihicle speed/2) rpm • LU pressure: More than 0.2 MPa	• Torque converter clutch solenoid valve • Control valve assembly • Torque converter

DTC CONFIRMATION PROCEDURE

CAUTION:

Be careful of the driving speed.

1. PREPARATION BEFORE WORK

If another "DTC CONFIRMATION PROCEDURE" occurs just before, turn ignition switch OFF and wait for at least 10 seconds, then perform the next test.

>> GO TO 2.

2. PREPARATION BEFORE OPERATION

With CONSULT

1. Start the engine.
2. Select “Data Monitor” in “TRANSMISSION”.
3. Select “FLUID TEMP”.
4. Confirm that the CVT fluid temperature is in the following range.

FLUID TEMP	: 20°C (68°F) or more

With GST

1. Start the engine.
2. Set the CVT fluid to 20°C (68°F) or more.
   NOTE:
   When the ambient temperature is 20°C (68°F), the CVT fluid usually increases to 50 to 80°C (122 to 176°F) with driving in an urban area for approximately 10 minutes.

Is the CVT fluid 20°C (68°F) or more?

YES >> GO TO 3.
NO >> 1. Warm the transaxle.
2. GO TO 3.

3. CHECK DTC DETECTION

1. Drive the vehicle.
2. Maintain the following conditions for 10 seconds or more.

Selector lever	: “D” position
Accelerator pedal position	: 0.5/8 or more
Vehicle speed	: 40 km/h (25 MPH) or more

3. Stop the vehicle.
4. Check the first trip DTC.

Is “P0744” detected?

YES >> Go to TM-123, "Diagnosis Procedure".

cardiagn.com

NO >> INSPECTION END

Diagnosis Procedure

INFOID:0000000012404497

1. CHECK INTERMITTENT INCIDNT

Refer to GI-41, "Intermittent Incident".

Is the inspection result normal?

YES >> Replace transaxle assembly. Refer to TM-215, "Removal and Installation".
NO >> Repair or replace the malfunction items.

cardiagn.com

P0746 PRESSURE CONTROL SOLENOID A

DTC Logic

INFOID:0000000012404498

DTC DETECTION LOGIC

DTC	CONSULT screen terms (Trouble diagnosis content)	DTC detection condition	Possible causes
P0746	PC SOLENOID A (Pressure Control Solenoid A Performance/Stuck Off)	The detecting condition A or detection condition B is detected twice or more (1 second or more later after detection of the first) in the same DC under the following diagnosis conditions: • Diagnosis conditions - Engine speed: More than 600 rpm - Primary pulley speed: More than 450 rpm - Idle is not being detected. - Acceleration/deceleration speed: –0.49 m/s^2 (–0.05 G) or more - The primary pulley speed experienced 300 rpm or more and the secondary pulley speed experienced 250 rpm or more at least once. - Secondary pulley speed: More than 150 rpm - TCM power supply voltage: More than 11 V • Detection condition A - Status with the shifting ratio of the primary pulley speed/secondary pulley ratio exceeding 2.981 is 0.2 sec or more continuously. • Detection condition B - Status with the shifting ratio of the primary pulley speed/secondary pulley ratio exceeding 3.781 is 0.1 sec or more continuously.	• Line pressure solenoid valve • Control valve assembly

NOTE:
DC stands for "DRIVING CYCLE" and indicates a series of driving cycle of "Ignition switch OFF → ON → driving → OFF".

DTC CONFIRMATION PROCEDURE

CAUTION:
Be careful of the driving speed.

1. PREPARATION BEFORE WORK

If another "DTC CONFIRMATION PROCEDURE" occurs just before, turn ignition switch OFF and wait for at least 10 seconds, then perform the next test.

>> GO TO 2.

2. CHECK DTC DETECTION

1. Start the engine.
2. Drive the vehicle.
3. Maintain the following conditions for 10 seconds or more.

Selector lever	: “D” position
Accelerator pedal position	: 0.5/8 or more
Vehicle speed	: 40 km/h (25 MPH) or more

4. Stop the vehicle.
5. Check the first trip DTC.

Is “P0746”detected?

YES >> Go to TM-125, "Diagnosis Procedure".

cardiagn.com

NO >> INSPECTION END

Diagnosis Procedure

INFOID:0000000012404499

1. CHECK INTERMITTENT INCIDNT

Refer to GI-41, "Intermittent Incident".

Is the inspection result normal?

YES >> Replace transaxle assembly. Refer to TM-215, "Removal and Installation".
NO >> Repair or replace the malfunction items.

cardiagn.com

P0776 PRESSURE CONTROL SOLENOID B

DTC Logic

INFOID:0000000012404500

DTC DETECTION LOGIC

DTC	CONSULT screen terms (Trouble diagnosis content)	DTC detection condition	Possible cause
P0776	PC SOLENOID B (Pressure Control Solenoid “B” Performance/Stuck Off)	When any of 1 or 2 is satisfied and this state is maintained for 10 seconds: 1. When all of the following conditions are satisfied: - DTC other than the applicable DTC is not detected. - Engine speed: More than 625 rpm - Selector lever: Other than P/N position - CVT fluid temperature: More than -20°C (-4°F) - TCM power supply: More than 11 V - The difference between instruction pressure of secondary pressure and 10-msec-ago instruction secondary pressure is 0 MPa or more - Instruction pressure of secondary pressure: 0 MPa or more - Instruction pressure of secondary pressure - secondary pressure: More than 1.2 MPa - When all of the following conditions are satisfied and this state is maintained for 5.5 seconds: • DTC other than the applicable DTC is not detected. • CVT fluid temperature: More than -20°C (-4°F) • Selector lever: Other than P/N position • Secondary pressure - instruction pressure of secondary pressure: 1.2 MPa or more 2. When all of the following conditions are satisfied: - DTC other than the applicable DTC is not detected. - CVT fluid temperature: More than -20°C (-4°F) - Selector lever: Other than P/N position - TCM power supply: More than 11 V - When all of the following conditions are satisfied and this state is maintained for 5.5 seconds: • DTC other than the applicable DTC is not detected. • CVT fluid temperature: More than -20°C (-4°F) • Selector lever: Other than P/N position • Secondary pressure - instruction pressure of secondary pressure: 1.2 MPa or more - The difference between instruction pressure of secondary pressure and 10-msec-ago instruction secondary pressure is 0 MPa or more - Secondary pressure - instruction pressure of secondary pressure: More than 1.2 MPa	Secondary pressure solenoid valve

cardiagn.com

DTC CONFIRMATION PROCEDURE

CAUTION:

Always drive vehicle at a safe speed.

1. PREPARATION BEFORE WORK

If another “DTC CONFIRMATION PROCEDURE” occurs just before, turn ignition switch OFF and wait for at least 10 seconds, then perform the next test.

>> GO TO 2.

2. CHECK DTC DETECTION

1. Start the engine.
2. Drive the vehicle.
3. Maintain the following condition for 20 seconds or more.

Selector lever	: “D” position
Vehicle speed	: 40 km/h (25 MPH) or more
Accelerator pedal position	: 1.0/8 or more

4. Stop the vehicle.
5. Check the first trip DTC.

Is “P0776” detected?

YES >> Go to TM-127, "Diagnosis Procedure".
NO >> INSPECTION END

Diagnosis Procedure

INFOID:0000000012404501

1. CHECK INTERMITTENT INCIDNT

Refer to GI-41, "Intermittent Incident".

Is the inspection result normal?

YES >> Replace transaxle assembly. Refer to TM-215, "Removal and Installation".
NO >> Repair or replace the malfunction items.

cardiagn.com

P0778 PRESSURE CONTROL SOLENOID B

DTC Logic

INFOID:0000000012404502

DTC DETECTION LOGIC

DTC	CONSULT screen terms (Trouble diagnosis content)	DTC detection condition	Possible cause
P0778	PC SOLENOID B (Pressure Control Solenoid “B” Electrical)	When all of the following conditions are satisfied and this state is maintained for 0.48 seconds: • TCM power supply voltage: More than 11 V • TCM judges that solenoid valve circuit is shorted to ground.	• Harness or connectors (Secondary pressure solenoid valve circuit is shorted to ground.) • Secondary pressure solenoid valve

DTC CONFIRMATION PROCEDURE

CAUTION:

Always drive vehicle at a safe speed.

1. PREPARATION BEFORE WORK

If another “DTC CONFIRMATION PROCEDURE” occurs just before, turn ignition switch OFF and wait for at least 10 seconds, then perform the next test.

>> GO TO 2.

2. CHECK DTC DETECTION

1. Start the engine and wait for 5 seconds or more.
2. Check the first trip DTC.

Is “P0778” detected?

YES >> Go to TM-128, "Diagnosis Procedure".
NO >> INSPECTION END

Diagnosis Procedure

INFOID:0000000012404503

1. CHECK CIRCUIT BETWEEN TCM AND CVT UNIT

1. Turn ignition switch OFF.
2. Disconnect TCM connector and CVT unit connector.
3. Check continuity between TCM harness connector terminal and ground.

TCM		—	Continuity
Connector	Terminal		
F23	39	Ground	Not existed

Is the inspection result normal?

YES >> GO TO 2.
NO >> Repair or replace damaged parts.

2. CHECK CIRCUIT BETWEEN CVT UNIT AND GROUND

Check continuity between CVT unit harness connector terminal and ground.

CVT unit		—	Condition	Resistance
Connector	Terminal			
F250	3	Ground	CVT fluid temperature: 20°C (68°F)	5.5 – 7.0 Ω
			CVT fluid temperature: 50°C (122°F)	6.0 – 8.0 Ω
			CVT fluid temperature: 80°C (176°F)	6.5 – 8.5 Ω

Is the inspection result normal?

YES >> Check intermittent incident. Refer to GI-41, "Intermittent Incident".

cardiagn.com

NO >> GO TO 3.

3. CHECK CIRCUIT BETWEEN CVT UNIT AND CONTROL VALVE

1. Disconnect control valve connector. Refer to TM-193, "Exploded View".
2. Check continuity between CVT unit harness connector terminal and control valve harness connector terminal.

CVT unit		Control valve		Continuity
Connector	Terminal	Connector	Terminal	
F250	3	F251	2	Existed

Is the inspection result normal?

YES >> GO TO 4.
NO >> Replace terminal cord assembly. Refer to TM-194, "Removal and Installation".

4. CHECK CIRCUIT BETWEEN CONTROL VALVE AND GROUND

Check continuity between CVT unit harness connector terminal and ground.

Control valve Terminal	—	Condition	Resistance
2	Ground	CVT fluid temperature: 20°C (68°F)	5.5 – 7.0 Ω
		CVT fluid temperature: 50°C (122°F)	6.0 – 8.0 Ω
		CVT fluid temperature: 80°C (176°F)	6.5 – 8.5 Ω

Is the inspection result normal?

YES >> Check intermittent incident. Refer to GI-41, "Intermittent Incident".
NO >> There is malfunction of secondary pressure solenoid valve. Replace transaxle assembly. Refer to TM-215, "Removal and Installation".

cardiagn.com

P0779 PRESSURE CONTROL SOLENOID B

DTC Logic

INFOID:0000000012404504

DTC DETECTION LOGIC

DTC	Trouble diagnosis name	DTC detection condition	Possible causes
P0779	Pressure control solenoid B Intermittent	When all of the following conditions are satisfied and this state is maintained for 0.2 seconds: • TCM power supply voltage: More than 11 V • P0778 is not detected • TCM judges that solenoid valve circuit is open or shorted to power supply.	• Harness or connector (Secondary pressure solenoid valve circuit open or shorted to power supply) • Secondary pressure solenoid valve

DTC CONFIRMATION PROCEDURE

1. PREPARATION BEFORE WORK

If another "DTC CONFIRMATION PROCEDURE" occurs just before, turn ignition switch OFF and wait for at least 10 seconds, then perform the next test.

>> GO TO 2.

2. CHECK DTC DETECTION

1. Start the engine.
2. Drive the vehicle.
3. Maintain the following conditions for 5 seconds or more.

Selector lever	: “D” position
Vehicle speed	: 40 km/h (25 MPH) or more

4. Stop the vehicle.
5. Check the first trip DTC.

Is “P0779” detected?

YES >> Go to TM-130, "Diagnosis Procedure".
NO >> INSPECTION END

Diagnosis Procedure

INFOID:0000000012404505

1. CHECK CIRCUIT BETWEEN TCM AND CVT UNIT

1. Turn ignition switch OFF.
2. Disconnect TCM connector and CVT unit connector.
3. Check continuity between TCM harness connector terminal and CVT unit harness connector terminal.

TCM		CVT unit		Continuity
Connector	Terminal	Connector	Terminal	
F23	39	F24	3	Existed

Is the inspection result normal?

YES >> GO TO 2.
NO >> Repair or replace damaged parts.

2. CHECK CIRCUIT BETWEEN CVT UNIT AND GROUND

Check continuity between CVT unit harness connector terminal and ground.

cardiagn.com

CVT unit		—	Condition	Resistance
Connector	Terminal			
F250	3	Ground	CVT fluid temperature: 20°C (68°F)	5.5 – 7.0 Ω
			CVT fluid temperature: 50°C (122°F)	6.0 – 8.0 Ω
			CVT fluid temperature: 80°C (176°F)	6.5 – 8.5 Ω

Is the inspection result normal?

YES >> Check intermittent incident. Refer to GI-41, "Intermittent Incident".
NO >> GO TO 3.

3. CHECK CIRCUIT BETWEEN CVT UNIT AND CONTROL VALVE

1. Disconnect control valve connector. Refer to TM-193, "Exploded View".
2. Check continuity between CVT unit harness connector terminal and control valve harness connector terminal.

CVT unit		Control valve		Continuity
Connector	Terminal	Connector	Terminal	
F250	3	F251	2	Existed

Is the inspection result normal?

YES >> GO TO 4.
NO >> Replace terminal cord assembly. Refer to TM-194, "Removal and Installation".

4. CHECK CIRCUIT BETWEEN CONTROL VALVE AND GROUND

Check continuity between CVT unit harness connector terminal and ground.

Control valve	—	Condition	Resistance
Terminal			
2	Ground	CVT fluid temperature: 20°C (68°F)	5.5 – 7.0 Ω
		CVT fluid temperature: 50°C (122°F)	6.0 – 8.0 Ω
		CVT fluid temperature: 80°C (176°F)	6.5 – 8.5 Ω

Is the inspection result normal?

YES >> Check intermittent incident. Refer to GI-41, "Intermittent Incident".
NO >> There is malfunction of secondary pressure solenoid valve. Replace transaxle assembly. Refer to TM-215, "Removal and Installation".

cardiagn.com

P0841 TRANSMISSION FLUID PRESSURE SEN/SW A

DTC Logic

INFOID:0000000012404506

DTC DETECTION LOGIC

DTC	CONSULT screen terms (Trouble diagnosis content)	DTC detection condition	Possible cause
P0841	FLUID PRESS SEN/SW A (Transmission Fluid Pressure Sensor/Switch “A” Circuit Range/Performance)	When all of the following conditions are satisfied and this state is maintained for 5 seconds: • TCM power supply voltage: More than 11 V • DTC other than the applicable DTC is not detected. • Primary pulley speed: 300 rpm or more • Secondary pulley speed: 250 rpm or more • Target speed for shifting: Less than 0.1 seconds • Primary pulley pressure is outside the specified value.	• Harness or connectors (Secondary pressure sensor circuit is open or shorted.) • Harness or connectors (Primary pressure sensor circuit is open or shorted.) • Secondary pressure sensor

DTC CONFIRMATION PROCEDURE

CAUTION:

Always drive vehicle at a safe speed.

1. PREPARATION BEFORE WORK

If another “DTC CONFIRMATION PROCEDURE” occurs just before, turn ignition switch OFF and wait for at least 10 seconds, then perform the next test.

>> GO TO 2.

2. CHECK DTC DETECTION

1. Start the engine.
2. Drive the vehicle.
3. Maintain the following condition for 10 seconds or more.

Selector lever	: “D” position
Vehicle speed	: Constant speed of 40 km/h (25 MPH)

CAUTION:

Also keep the accelerator pedal position constant.

4. Stop the vehicle.
5. Check the first trip DTC.

Is “P0841” detected?

YES >> Go to TM-132, "Diagnosis Procedure".
NO >> INSPECTION END

Diagnosis Procedure

INFOID:0000000012404507

1. CHECK INTERMITTENT INCIDENT

Refer to GI-41, "Intermittent Incident".

Is the inspection result normal?

YES >> Replace the transaxle assembly. Refer to TM-215, "Removal and Installation".
NO >> Repair or replace damaged parts.

cardiagn.com

P0847 TRANSMISSION FLUID PRESSURE SEN/SW B

DTC Logic

INFOID:0000000012404508

DTC DETECTION LOGIC

DTC	CONSULT screen terms (Trouble diagnosis content)	DTC detection condition	Possible causes
P0847	FLUID PRESS SEN/SW B (Transmission Fluid Pressure Sensor/Switch B Circuit Low)	When all of the following conditions are satisfied and this state is maintained for 5 seconds: • CVT fluid temperature: More than –20°C (–4°F) • TCM power supply voltage: 11 V or more • Secondary pressure sensor voltage: 0.09 V or less	• Harness or connector (Secondary pressure sensor circuit is open or shorted to ground) • Secondary pressure sensor • Control valve assembly

DTC CONFIRMATION PROCEDURE

1. PREPARATION BEFORE WORK

If another "DTC CONFIRMATION PROCEDURE" occurs just before, turn ignition switch OFF and wait for at least 10 seconds, then perform the next test.

>> GO TO 2.

2. CHECK DTC DETECTION

With CONSULT
1. Start the engine.
2. Select “Data Monitor” in “TRANSMISSION”.
3. Select “FLUID TEMP”.
4. Maintain the following conditions for 10 seconds or more.

FLUID TEMP : –20°C (–4°F)

5. Check the first trip DTC.

With GST
1. Start the engine and wait for at least 10 seconds.
   CAUTION:
   When the ambient temperature is less than –20°C (–4°F) and the engine is cold, warm up the engine for approximately 5 minutes.
2. Check the first trip DTC.

Is “P0847”detected?

YES >> Go to TM-133, "Diagnosis Procedure".
NO >> INSPECTION END

Diagnosis Procedure

INFOID:0000000012404509

1. CHECK TCM INPUT SIGNALS

1. Turn ignition switch OFF.
2. Start the engine.
3. Check voltage between TCM harness connector terminals.

+		–	Condition	Voltage
TCM				
Connector	Terminal			
F23	16	Ground	• After engine warm up • Selector lever: “N” position • At idle	1.7 – 1.8 V

Is the inspection result normal?

cardiagn.com

YES >> Check intermittent incident. Refer to GI-41, "Intermittent Incident".
NO >> GO TO 2.

2. CHECK CIRCUIT BETWEEN TCM AND CVT UNIT (PART 1)

1. Turn ignition switch OFF.
2. Disconnect TCM connector and CVT unit connector.
3. Check continuity between TCM harness connector terminals and CVT unit harness connector terminals.

TCM		CVT unit		Continuity
Connector	Terminal	Connector	Terminal	
F23	11	F24	18	Existed
	16		14	
	26		22	

Is the inspection result normal?

YES >> GO TO 3.
NO >> Repair or replace malfunctioning parts.

3. CHECK CIRCUIT BETWEEN TCM AND CVT UNIT (PART 2)

Check continuity between TCM harness connector terminals and ground.

TCM		—	Continuity
Connector	Terminal		
F23	16	Ground	Not existed
	26		

Is the inspection result normal?

YES >> GO TO 4.
NO >> Repair or replace malfunctioning parts.

4. CHECK TERMINAL CORD ASSEMBLY (PART 1)

1. Remove terminal cord assembly. Refer to TM-194, "Removal and Installation".
2. Check continuity between CVT unit harness connector terminals and control valve harness connector terminals.

CVT unit		Control valve		Continuity
Connector	Terminal	Connector	Terminal	
F250	14	F251	12	Existed
	18		13	
	22		11	

Is the inspection result normal?

YES >> GO TO 5.
NO >> Repair or replace malfunctioning parts.

5. CHECK TERMINAL CORD ASSEMBLY (PART 2)

Check damage of terminal cord assembly.

Is the inspection result normal?

YES >> There is malfunction of secondary pressure sensor. Replace transaxle assembly. Refer to TM-215, "Removal and Installation".
NO >> Repair or replace malfunctioning parts.

cardiagn.com

P0848 TRANSMISSION FLUID PRESSURE SEN/SW B

DTC Logic

INFOID:0000000012404510

DTC DETECTION LOGIC

DTC	CONSULT screen terms (Trouble diagnosis content)	DTC detection condition	Possible causes
P0848	FLUID PRESS SEN/SW B (Transmission Fluid Pressure Sensor/Switch B Circuit Low)	When all of the following conditions are satisfied and this state is maintained for 5 seconds: • CVT fluid temperature: More than –20°C (–4°F) • TCM power supply voltage: More than 11 V • Instruction secondary pressure: 5.7 MPa or less • Scondary pressure sensor voltage: 4.7 V or more	• Harness or connector (Secondary pressure sensor circuit is shorted to power supply) • Secondary pressure sensor • Control valve assembly

DTC CONFIRMATION PROCEDURE

1. PREPARATION BEFORE WORK

If another "DTC CONFIRMATION PROCEDURE" occurs just before, the ignition switch OFF and wait for at least 10 seconds, then perform the next test.

>> GO TO 2.

2. CHECK DTC DETECTION

With CONSULT
1. Start the engine.
2. Select “Data Monitor” in “TRANSMISSION”.
3. Select “FLUID TEMP”.
4. Maintain the following conditions for 10 seconds or more.

FLUID TEMP : More than –20°C (–4°F)

5. Check the first trip DTC.

With GST
1. Start the engine and wait for at least 10 seconds.
   CAUTION:
   When the ambient temperature is less than –20°C (–4°F) and the engine is cold, warm up the engine for approximately 5 minutes.
2. Check the first trip DTC.

Is “P0848”detected?

YES >> Go to TM-135, "Diagnosis Procedure".
NO >> INSPECTION END

Diagnosis Procedure

INFOID:0000000012404511

1. CHECK TCM INPUT SIGNALS

1. Turn ignition switch OFF.
2. Start the engine.
3. Check voltage between TCM harness connector terminals.

cardiagn.com

+		–	Condition	Voltage
TCM				
Connector	Terminal			
F23	16	Ground	• After engine warm up • Selector lever: “N” position • At idle	1.7 – 1.8 V

Is the inspection result normal?

YES >> Check intermittent incident. Refer to GI-41, "Intermittent Incident".
NO >> GO TO 2.

2. CHECK SECONDARY PRESSURE SENSOR POWER CIRCUIT

1. Turn ignition switch OFF.
2. Connect TCM connector.
3. Turn ignition switch ON.
4. Disconnect CVT unit connector.
5. Check voltage between CVT unit harness connector terminal and ground.

+		–	Voltage
CVT unit			
Connector	Terminal		
F24	22	Ground	Approx. 5.0 V

Is the inspection result normal?

YES >> GO TO 3.
NO >> Repair or replace malfunctioning parts.

3. CHECK SECONDARY PRESSURE SENSOR SIGNAL CIRCUIT

Check voltage between CVT unit harness connector terminal and ground.

+		–	Voltage
CVT unit			
Connector	Terminal		
F24	14	Ground	Approx. 0 V

Is the inspection result normal?

YES >> GO TO 4.
NO >> Repair or replace malfunctioning parts.

4. CHECK TERMINAL CORD ASSEMBLY

1. Turn ignition switch OFF.
2. Remove terminal cord assembly. Refer to TM-194, "Removal and Installation".
3. Check damage of terminal cord assembly.

Is the inspection result normal?

YES >> There is malfunction of secondary pressure sensor. Replace transaxle assembly. Refer to TM-215, "Removal and Installation".
NO >> Repair or replace malfunctioning parts.

cardiagn.com

P084C TRANSMISSION FLUID PRESSURE SEN/SW H

DTC Logic

INFOID:0000000012404512

DTC DETECTION LOGIC

DTC	CONSULT screen terms (Trouble diagnosis content)	DTC detection condition	Possible causes
P084C	FLUID PRESS SEN/SW H (Transmission Fluid Pressure Sensor/Switch H Circuit Low)	When all of the following conditions are satisfied and this state is maintained for 5 seconds: • CVT fluid temperature: More than –20°C (–4°F) • TCM power supply voltage: More than 11 V • Primary pressure sensor voltage: 0.09 V or less	• Harness or connector (Primary pressure sensor circuit is open or shorted to ground) • Primary pressure sensor • Control valve assembly

DTC CONFIRMATION PROCEDURE

1. PREPARATION BEFORE WORK

If another "DTC CONFIRMATION PROCEDURE" occurs just before, turn ignition switch OFF and wait for at least 10 seconds, then perform the next test.

>> GO TO 2.

2. CHECK DTC DETECTION

With CONSULT
1. Start the engine.
2. Select “Data Monitor” in “TRANSMISSION”.
3. Select “FLUID TEMP”.
4. Maintain the following conditions for 10 seconds or more.

FLUID TEMP : More than –20°C (–4°F)

5. Check the first trip DTC.

With GST
1. Start the engine and wait for at least 10 seconds.
   CAUTION:
   When the ambient temperature is less than –20°C (–4°F) and the engine is cold, warm up the engine for approximately 5 minutes.
2. Check the first trip DTC.

Is “P084C”detected?

YES >> Go to TM-137, "Diagnosis Procedure".
NO >> INSPECTION END

Diagnosis Procedure

INFOID:0000000012404513

1. CHECK TCM INPUT SIGNALS

1. Turn ignition switch OFF.
2. Start the engine.
3. Check voltage between TCM harness connector terminals.

+		–	Condition	Voltage
TCM				
Connector	Terminal			
F23	17	Ground	• After engine warm up • Selector lever: “N” position • At idle	1.32 – 1.34 V

Is the inspection result normal?

cardiagn.com

YES >> Check intermittent incident. Refer to GI-41, "Intermittent Incident".
NO >> GO TO 2.

2. CHECK CIRCUIT BETWEEN TCM AND CVT UNIT (PART 1)

1. Turn ignition switch OFF.
2. Disconnect TCM connector and CVT unit connector.
3. Check continuity between TCM harness connector terminals and CVT unit harness connector terminals.

TCM		CVT unit		Continuity
Connector	Terminal	Connector	Terminal	
F23	11	F24	18	Existed
	17		13	
	26		22	

Is the inspection result normal?

YES >> GO TO 3.
NO >> Repair or replace malfunctioning parts.

3. CHECK CIRCUIT BETWEEN TCM AND CVT UNIT (PART 2)

Check continuity between TCM harness connector terminals and ground.

TCM		—	Continuity
Connector	Terminal		
F23	17	Ground	Not existed
	26		

Is the inspection result normal?

YES >> GO TO 4.
NO >> Repair or replace malfunctioning parts.

4. CHECK TERMINAL CORD ASSEMBLY (PART 1)

1. Remove terminal cord assembly. Refer to TM-194, "Removal and Installation".
2. Check continuity between CVT unit harness connector terminals and control valve harness connector terminals.

CVT unit		Control valve		Continuity
Connector	Terminal	Connector	Terminal	
F250	13	F251	10	Existed
	18		13	
	22		11	

Is the inspection result normal?

YES >> GO TO 5.
NO >> Repair or replace malfunctioning parts.

5. CHECK TERMINAL CORD ASSEMBLY (PART 2)

Check damage of terminal cord assembly.

Is the inspection result normal?

YES >> There is malfunction of primary pressure sensor. Replace transaxle assembly. Refer to TM-215, "Removal and Installation".
NO >> Repair or replace malfunctioning parts.

cardiagn.com

P084D TRANSMISSION FLUID PRESSURE SEN/SW H

DTC Logic

INFOID:0000000012404514

DTC DETECTION LOGIC

DTC	CONSULT screen terms (Trouble diagnosis content)	DTC detection condition	Possible causes
P084D	FLUID PRESS SEN/SW H (Transmiision Fluid Pressure Sensor/Switch “H” Circuit High)	When all of the following conditions are satisfied and this state is maintained for 5 seconds: • CVT fluid temperature: More than –20°C (–4°F) • TCM power supply voltage: More than 11 V • Primary pressure sensor voltage: 4.7 V or more	• Harness or connector (Primary pressure sensor circuit is open or shorted to ground) • Primary pressure sensor • Control valve assembly

DTC CONFIRMATION PROCEDURE

1.PREPARATION BEFORE WORK

If another "DTC CONFIRMATION PROCEDURE" occurs just before, turn ignition switch OFF and wait for at least 10 seconds, then perform the next test.

>> GO TO 2.

2.CHECK DTC DETECTION

With CONSULT
1. Start the engine.
2. Select “Data Monitor” in “TRANSMISSION”.
3. Select “FLUID TEMP”.
4. Maintain the following conditions for 10 seconds or more.

FLUID TEMP : More than –20°C (–4°F)

5. Check the first trip DTC.

With GST
1. Start the engine and wait for at least 10 seconds.
   CAUTION:
   When the ambient temperature is less than –20°C (–4°F) and the engine is cold, warm up the engine for approximately 5 minutes.
2. Check the first trip DTC.

Is “P084D”detected?

YES >> Go to TM-139, "Diagnosis Procedure".
NO >> INSPECTION END

Diagnosis Procedure

INFOID:0000000012404515

1.CHECK TCM INPUT SIGNALS

1. Turn ignition switch OFF.
2. Start the engine.
3. Check voltage between TCM harness connector terminals.

+		–	Condition	Voltage
TCM				
Connector	Terminal			
F23	17	Ground	• After engine warm up • Selector lever: “N” position • At idle	1.32 – 1.34 V

Is the inspection result normal?

cardiagn.com

YES >> Check intermittent incident. Refer to GI-41, "Intermittent Incident".
NO >> GO TO 2.

2. CHECK PRIMARY PRESSURE SENSOR POWER CIRCUIT

1. Turn ignition switch OFF.
2. Connect TCM connector.
3. Turn ignition switch ON.
4. Disconnect CVT unit connector.
5. Check voltage between CVT unit harness connector terminal and ground.

+		–	Voltage
CVT unit			
Connector	Terminal		
F24	22	Ground	Approx. 5.0 V

Is the inspection result normal?

YES >> GO TO 3.
NO >> Repair or replace malfunctioning parts.

3. CHECK PRIMARY PRESSURE SENSOR SIGNAL CIRCUIT

Check voltage between CVT unit harness connector terminal and ground.

+		–	Voltage
CVT unit			
Connector	Terminal		
F24	13	Ground	Approx. 0 V

Is the inspection result normal?

YES >> GO TO 4.
NO >> Repair or replace malfunctioning parts.

4. CHECK TERMINAL CORD ASSEMBLY

1. Turn ignition switch OFF.
2. Remove terminal cord assembly. Refer to TM-194, "Removal and Installation".
3. Check damage of terminal cord assembly.

Is the inspection result normal?

YES >> There is malfunction of primary pressure sensor. Replace transaxle assembly. Refer to TM-215, "Removal and Installation".
NO >> Repair or replace malfunctioning parts.

cardiagn.com

P0863 TCM COMMUNICATION

DTC Logic

INFOID:0000000012404516

DTC DETECTION LOGIC

DTC	CONSULT screen terms (Trouble diagnosis content)	DTC detection condition	Possible causes
P0863	CONTROL UNIT (CAN) (TCM Communication Circuit)	An error is detected at the initial CAN diagnosis of TCM.	TCM

DTC CONFIRMATION PROCEDURE

1.PREPARATION BEFORE WORK

If another "DTC CONFIRMATION PROCEDURE" occurs just before, turn ignition switch OFF and wait for at least 10 seconds, then perform the next test.

>> GO TO 2.

2.CHECK DTC DETECTION

1. Start the engine.
2. Check the DTC.

Is “P0863” detected?

YES >> Go to TM-141, "Diagnosis Procedure".
NO >> INSPECTION END

Diagnosis Procedure

INFOID:0000000012404517

1.CHECK INTERMITTENT INCIDNT

Refer to GI-41, "Intermittent Incident".

Is the inspection result normal?

YES >> Replace TCM. Refer to TM-192, "Removal and Installation".
NO >> Repair or replace malfunctioning parts.

cardiagn.com

P0890 TCM

DTC Logic

INFOID:0000000012404518

DTC DETECTION LOGIC

DTC	CONSULT screen terms (Trouble diagnosis content)	DTC detection condition	Possible causes
P0890	TCM (Transmission Control Module Power Relay Sense Circuit Low)	When all of the following conditions are satisfied and this state is maintained for 0.2 seconds: • TCM power supply voltage: More than 11 V • Battery voltage: Less than 8.4 V	Harness or connector (TCM power supply (back-up) circuit is open or shorted.)

DTC CONFIRMATION PROCEDURE

1. PREPARATION BEFORE WORK

If another "DTC CONFIRMATION PROCEDURE" occurs just before, turn ignition switch OFF and wait for at least 10 seconds, then perform the next test.

>> GO TO 2.

2. CHECK DTC DETECTION

1. Start the engine and wait for 5 seconds or more.
2. Check the DTC.

Is “P0890” detected?

YES >> Go to TM-142, "Diagnosis Procedure".
NO >> INSPECTION END

Diagnosis Procedure

INFOID:0000000012404519

1. CHECK TCM POWER SUPPLY (BACK-UP) CIRCUIT

1. Turn ignition switch OFF.
2. Disconnect TCM connector.
3. Check voltage between TCM harness connector terminals and ground.

TCM		Ground	Voltage
Connector	Terminal		
F23	45	Ground	10 – 16 V
	46		

Is the inspection result normal?

YES >> Check intermittent incident. Refer to GI-41, "Intermittent Incident".
NO >> GO TO 2.

2. DETECT MALFUNCTIONING ITEMS

Check the following items:
- Open or short circuit of harness between battery positive terminal and TCM connectors terminals 45 and 46.
- 10A fuse (No.11, located in the fuse and fusible link block). Refer to PG-98, "Fuse and Fusible Link Arrangement".

Is the inspection result normal?

YES >> Check intermittent incident. Refer to GI-41, "Intermittent Incident".
NO >> Repair or replace malfunctioning parts.

cardiagn.com

P0962 PRESSURE CONTROL SOLENOID A

DTC Logic

INFOID:0000000012404520

DTC DETECTION LOGIC

DTC	CONSULT screen terms (Trouble diagnosis content)	DTC detection condition	Possible causes
P0962	PC SOLENOID A (Pressure Control Solenoid A Control Circuit Low)	When all of the following conditions are satisfied and this state is maintained for 0.2 seconds: • TCM power supply voltage: More than 11 V • TCM judges that solenoid valve circuit is shorted to ground.	• Harness or connector (Line pressure solenoid valve circuit is shorted to ground) • Line pressure solenoid valve

DTC CONFIRMATION PROCEDURE

1. PREPARATION BEFORE WORK

If another "DTC CONFIRMATION PROCEDURE" occurs just before, turn ignition switch OFF and wait for at least 10 seconds, then perform the next test.

>> GO TO 2.

2. CHECK DTC DETECTION

1. Start the engine and wait for 5 seconds or more.
2. Check the first trip DTC.

Is “P0962” detected?

YES >> Go to TM-143, "Diagnosis Procedure".
NO >> INSPECTION END

Diagnosis Procedure

INFOID:0000000012404521

1. CHECK CIRCUIT BETWEEN TCM AND CVT UNIT

1. Turn ignition switch OFF.
2. Disconnect TCM connector and CVT unit connector.
3. Check continuity between TCM harness connector terminal and ground.

TCM		—	Continuity
Connector	Terminal		
F23	30	Ground	Not existed

Is the inspection result normal?

YES >> GO TO 2.
NO >> Repair or replace damaged parts.

2. CHECK CIRCUIT BETWEEN CVT UNIT AND GROUND

Check continuity between CVT unit harness connector terminal and ground.

CVT unit		—	Condition	Resistance
Connector	Terminal			
F250	1	Ground	CVT fluid temperature: 20°C (68°F)	5.5 – 7.0 Ω
			CVT fluid temperature: 50°C (122°F)	6.0 – 8.0 Ω
			CVT fluid temperature: 80°C (176°F)	6.5 – 8.5 Ω

Is the inspection result normal?

YES >> Check intermittent incident. Refer to GI-41, "Intermittent Incident".
NO >> GO TO 3.

cardiagn.com

3. CHECK CIRCUIT BETWEEN CVT UNIT AND CONTROL VALVE

1. Disconnect control valve connector. Refer to TM-193, "Exploded View".
2. Check continuity between CVT unit harness connector terminal and control valve harness connector terminal.

CVT unit		Control valve		Continuity
Connector	Terminal	Connector	Terminal	
F250	1	F251	1	Existed

Is the inspection result normal?

YES >> GO TO 4.
NO >> Replace terminal cord assembly. Refer to TM-194, "Removal and Installation".

4. CHECK CIRCUIT BETWEEN CONTROL VALVE AND GROUND

Check continuity between CVT unit harness connector terminal and ground.

Control valve Terminal	—	Condition	Resistance
1	Ground	CVT fluid temperature: 20°C (68°F)	5.5 – 7.0 Ω
		CVT fluid temperature: 50°C (122°F)	6.0 – 8.0 Ω
		CVT fluid temperature: 80°C (176°F)	6.5 – 8.5 Ω

Is the inspection result normal?

YES >> Check intermittent incident. Refer to GI-41, "Intermittent Incident".
NO >> There is malfunction of line pressure solenoid valve. Replace transaxle assembly. Refer to TM-215, "Removal and Installation".

cardiagn.com

P0963 PRESSURE CONTROL SOLENOID A

DTC Logic

INFOID:0000000012404522

DTC DETECTION LOGIC

DTC	CONSULT screen terms (Trouble diagnosis content)	DTC detection condition	Possible causes
P0963	PC SOLENOID A (Pressure Control Solenoid A Control Circuit High)	When all of the following conditions are satisfied and this state is maintained for 0.2 seconds: • TCM power supply voltage: More than 11 V • P0962 is not detected • TCM judges that solenoid valve circuit is open.	• Harness or connector (Line pressure solenoid valve circuit is open or shorted to power supply) • Line pressure solenoid valve

DTC CONFIRMATION PROCEDURE

1. PREPARATION BEFORE WORK

If another "DTC CONFIRMATION PROCEDURE" occurs just before, turn ignition switch OFF and wait for at least 10 seconds, then perform the next test.

>> GO TO 2.

2. CHECK DTC DETECTION

1. Start the engine and wait for 5 seconds or more.
2. Check the first trip DTC.

Is “P0963” detected?

YES >> Go to TM-145, "Diagnosis Procedure".
NO >> INSPECTION END

Diagnosis Procedure

INFOID:0000000012404523

1. CHECK CIRCUIT BETWEEN TCM AND CVT UNIT

1. Turn ignition switch OFF.
2. Disconnect TCM connector and CVT unit connector.
3. Check continuity between TCM harness connector terminal and ground.

TCM		CVT unit		Continuity
Connector	Terminal	Connector	Terminal	
F23	30	F24	1	Existed

Is the inspection result normal?

YES >> GO TO 2.
NO >> Repair or replace damaged parts.

2. CHECK CIRCUIT BETWEEN CVT UNIT AND GROUND

Check continuity between CVT unit harness connector terminal and ground.

CVT unit		—	Condition	Resistance
Connector	Terminal			
F250	1	Ground	CVT fluid temperature: 20°C (68°F)	5.5 – 7.0 Ω
			CVT fluid temperature: 50°C (122°F)	6.0 – 8.0 Ω
			CVT fluid temperature: 80°C (176°F)	6.5 – 8.5 Ω

Is the inspection result normal?

YES >> Check intermittent incident. Refer to GI-41, "Intermittent Incident".

cardiagn.com

NO >> GO TO 3.

3. CHECK CIRCUIT BETWEEN CVT UNIT AND CONTROL VALVE

1. Disconnect control valve connector. Refer to TM-193, "Exploded View".
2. Check continuity between CVT unit harness connector terminal and control valve harness connector terminal.

CVT unit		Control valve		Continuity
Connector	Terminal	Connector	Terminal	
F250	1	F251	1	Existed

Is the inspection result normal?

YES >> GO TO 4.
NO >> Replace terminal cord assembly. Refer to TM-194, "Removal and Installation".

4. CHECK CIRCUIT BETWEEN CONTROL VALVE AND GROUND

Check continuity between CVT unit harness connector terminal and ground.

Control valve Terminal	—	Condition	Resistance
1	Ground	CVT fluid temperature: 20°C (68°F)	5.5 – 7.0 Ω
		CVT fluid temperature: 50°C (122°F)	6.0 – 8.0 Ω
		CVT fluid temperature: 80°C (176°F)	6.5 – 8.5 Ω

Is the inspection result normal?

YES >> Check intermittent incident. Refer to GI-41, "Intermittent Incident".
NO >> There is malfunction of line pressure solenoid valve. Replace transaxle assembly. Refer to TM-215, "Removal and Installation".

cardiagn.com

P0965 PRESSURE CONTROL SOLENOID B

DTC Logic

INFOID:0000000012404524

DTC DETECTION LOGIC

DTC	CONSULT screen terms (Trouble diagnosis content)	DTC detection condition	Possible causes
P0965	PC SOLENOID B (Pressure Control Solenoid B Control Circuit Range Performance)	When any of 1 or 2 is satisfied and this state is maintained for 10 seconds: 1. When all of the following conditions are satisfied: - DTC other than the applicable DTC is not detected. - Engine speed: More than 625 rpm - Selector lever: Other than P/N position - CVT fluid temperature: More than -20°C (-4°F) - TCM power supply: More than 11 V - The difference between instruction pressure of primary pressure and 10-msec-ago instruction primary pressure is 0 MPa or more - Instruction pressure of primary pressure: 0.86 MPa or more - Instruction pressure of primary pressure - primary pressure: More than 1.2 MPa - When all of the following conditions are satisfied and this state is maintained for 1 second: • DTC other than the applicable DTC is not detected. • CVT fluid temperature: More than -20°C (-4°F) • Selector lever: Other than P/N position • Engine speed: More than 625 rpm • Instruction pressure of primary pressure: More than 2 MPa • Primary pressure: 0.4 MPa or less 2. When all of the following conditions are satisfied: - DTC other than the applicable DTC is not detected. - CVT fluid temperature: More than -20°C (-4°F) - Selector lever: Other than P/N position - TCM power supply: More than 11 V - When all of the following conditions are satisfied and this state is maintained for 5.5 seconds: • DTC other than the applicable DTC is not detected. • CVT fluid temperature: More than -20°C (-4°F) • Selector lever: Other than P/N position • Primary pressure - instruction pressure of primary pressure: 1.2 MPa or more - The difference between instruction pressure of primary pressure and 10-msec-ago instruction primary pressure is 0 MPa or more - Primary pressure - instruction pressure of primary pressure: More than 1.2 MPa	• Harness or connector (Primary pressure solenoid valvecircuit is open or shorted.) • Primary pressure solenoid valve

DTC CONFIRMATION PROCEDURE

cardiagn.com

1. PREPARATION BEFORE WORK

If another "DTC CONFIRMATION PROCEDURE" occurs just before, turn ignition switch OFF and wait for at least 10 seconds, then perform the next test.

>> GO TO 2.

2. CHECK DTC DETECTION

1. Start the engine.
2. Drive the vehicle.
3. Maintain the following conditions for 20 seconds or more.

Vehicle speed	: 40 km/h (25 MPH) or more

4. Stop the vehicle.
5. Check the first trip DTC.

Is “P0965”detected?

YES >> Go to TM-148, "Diagnosis Procedure".
NO >> INSPECTION END

Diagnosis Procedure

INFOID:0000000012404525

1. CHECK INTERMITTENT INCIDENT

Refer to GI-41, "Intermittent Incident".

Is the inspection result normal?

YES >> Replace transaxle assembly. Refer to TM-215, "Removal and Installation".
NO >> Repair or replace malfunctioning parts.

cardiagn.com

P0966 PRESSURE CONTROL SOLENOID B

DTC Logic

INFOID:0000000012404526

DTC DETECTION LOGIC

DTC	CONSULT screen terms (Trouble diagnosis content)	DTC detection condition	Possible causes
P0966	PC SOLENOID B (Pressure Control Solenoid B Control Circuit Low)	When all of the following conditions are satisfied and this state is maintained for 0.48 seconds: • TCM power supply voltage: More than 11 V • TCM judges that solenoid valve circuit is shorted to ground.	• Harness or connector (Primary pressure solenoid valve circuit shorted to ground) • Primary pressure solenoid valve

DTC CONFIRMATION PROCEDURE

1. PREPARATION BEFORE WORK

If another "DTC CONFIRMATION PROCEDURE" occurs just before, turn ignition switch OFF and wait for at least 10 seconds, then perform the next test.

>> GO TO 2.

2. CHECK DTC DETECTION

1. Start the engine and wait for 5 seconds or more.
2. Check the first trip DTC.

Is “P0966” detected?

YES >> Go to TM-149, "Diagnosis Procedure".
NO >> INSPECTION END

Diagnosis Procedure

INFOID:0000000012404527

1. CHECK CIRCUIT BETWEEN TCM AND CVT UNIT

1. Turn ignition switch OFF.
2. Disconnect TCM connector and CVT unit connector.
3. Check continuity between TCM harness connector terminal and ground.

TCM		—	Continuity
Connector	Terminal		
F23	40	Ground	Not existed

Is the inspection result normal?

YES >> GO TO 2.
NO >> Repair or replace damaged parts.

2. CHECK CIRCUIT BETWEEN CVT UNIT AND GROUND

Check continuity between CVT unit harness connector terminal and ground.

CVT unit		—	Condition	Resistance
Connector	Terminal			
F250	2	Ground	CVT fluid temperature: 20°C (68°F)	5.5 – 7.0 Ω
			CVT fluid temperature: 50°C (122°F)	6.0 – 8.0 Ω
			CVT fluid temperature: 80°C (176°F)	6.5 – 8.5 Ω

Is the inspection result normal?

YES >> Check intermittent incident. Refer to GI-41, "Intermittent Incident".
NO >> GO TO 3.

cardiagn.com

3. CHECK CIRCUIT BETWEEN CVT UNIT AND CONTROL VALVE

1. Disconnect control valve connector. Refer to TM-193, "Exploded View".
2. Check continuity between CVT unit harness connector terminal and control valve harness connector terminal.

CVT unit		Control valve		Continuity
Connector	Terminal	Connector	Terminal	
F250	2	F251	9	Existed

Is the inspection result normal?

YES >> GO TO 4.
NO >> Replace terminal cord assembly. Refer to TM-194, "Removal and Installation".

4. CHECK CIRCUIT BETWEEN CONTROL VALVE AND GROUND

Check continuity between CVT unit harness connector terminal and ground.

Control valve Terminal	—	Condition	Resistance
9	Ground	CVT fluid temperature: 20°C (68°F)	5.5 – 7.0 Ω
		CVT fluid temperature: 50°C (122°F)	6.0 – 8.0 Ω
		CVT fluid temperature: 80°C (176°F)	6.5 – 8.5 Ω

Is the inspection result normal?

YES >> Check intermittent incident. Refer to GI-41, "Intermittent Incident".
NO >> There is malfunction of primary pressure solenoid valve. Replace transaxle assembly. Refer to TM-215, "Removal and Installation".

cardiagn.com

P0967 PRESSURE CONTROL SOLENOID B

DTC Logic

INFOID:0000000012404528

DTC DETECTION LOGIC

DTC	CONSULT screen terms (Trouble diagnosis content)	DTC detection condition	Possible causes
P0967	PC SOLENOID B (Pressure Control Solenoid B Control Circuit High)	When all of the following conditions are satisfied and this state is maintained for 0.2 seconds: • TCM power supply voltage: More than 11 V • P0966 is not detected • TCM judges that solenoid valve circuit is open.	• Harness or connector (Primary pressure solenoid valve circuit open or shorted to power supply) • Primary pressure solenoid valve

DTC CONFIRMATION PROCEDURE

1. PREPARATION BEFORE WORK

If another "DTC CONFIRMATION PROCEDURE" occurs just before, turn ignition switch OFF and wait for at least 10 seconds, then perform the next test.

>> GO TO 2.

2. CHECK DTC DETECTION

1. Start the engine and wait for 5 seconds or more.
2. Check the first trip DTC.

Is “P0967” detected?

YES >> Go to TM-151, "Diagnosis Procedure".
NO >> INSPECTION END

Diagnosis Procedure

INFOID:0000000012404529

1. CHECK CIRCUIT BETWEEN TCM AND CVT UNIT

1. Turn ignition switch OFF.
2. Disconnect TCM connector and CVT unit connector.
3. Check continuity between TCM harness connector terminal and ground.

TCM		CVT unit		Continuity
Connector	Terminal	Connector	Terminal	
F23	40	F24	2	Existed

Is the inspection result normal?

YES >> GO TO 2.
NO >> Repair or replace damaged parts.

2. CHECK CIRCUIT BETWEEN CVT UNIT AND GROUND

Check continuity between CVT unit harness connector terminal and ground.

CVT unit		—	Condition	Resistance
Connector	Terminal			
F250	2	Ground	CVT fluid temperature: 20°C (68°F)	5.5 – 7.0 Ω
			CVT fluid temperature: 50°C (122°F)	6.0 – 8.0 Ω
			CVT fluid temperature: 80°C (176°F)	6.5 – 8.5 Ω

Is the inspection result normal?

YES >> Check intermittent incident. Refer to GI-41, "Intermittent Incident".

cardiagn.com

NO >> GO TO 3.

3. CHECK CIRCUIT BETWEEN CVT UNIT AND CONTROL VALVE

1. Disconnect control valve connector. Refer to TM-193, "Exploded View".
2. Check continuity between CVT unit harness connector terminal and control valve harness connector terminal.

CVT unit		Control valve		Continuity
Connector	Terminal	Connector	Terminal	
F250	2	F251	9	Existed

Is the inspection result normal?

YES >> GO TO 4.
NO >> Replace terminal cord assembly. Refer to TM-194, "Removal and Installation".

4. CHECK CIRCUIT BETWEEN CONTROL VALVE AND GROUND

Check continuity between CVT unit harness connector terminal and ground.

Control valve Terminal	—	Condition	Resistance
9	Ground	CVT fluid temperature: 20°C (68°F)	5.5 – 7.0 Ω
		CVT fluid temperature: 50°C (122°F)	6.0 – 8.0 Ω
		CVT fluid temperature: 80°C (176°F)	6.5 – 8.5 Ω

Is the inspection result normal?

YES >> Check intermittent incident. Refer to GI-41, "Intermittent Incident".
NO >> There is malfunction of primary pressure solenoid valve. Replace transaxle assembly. Refer to TM-215, "Removal and Installation".

cardiagn.com

P1586 G SENSOR

DTC Logic

INFOID:0000000012404530

DTC DETECTION LOGIC

DTC	Trouble diagnosis name	DTC detection condition	Possible causes
P1586	G Sensor Circuit Electrical	When 1 or 2 is satisfied and maintained for 5 seconds or more, and this state is satisfied two times within the same DC: 1. When all of the following conditions are satisfied: - G sensor detection voltage: 0.675 V or less - TCM power supply voltage: More than 11 V 2. When all of the following conditions are satisfied: - G sensor detection voltage: 3.13 V or more - TCM power supply voltage: More than 11 V	• Harness or connector (G sensor circuit) • G sensor

NOTE:
DC stands for “DRIVING CYCLE” and indicates a series of driving cycle of “Ignition switch OFF →ON → driving → OFF”.

DTC CONFIRMATION PROCEDURE

CAUTION:
Be careful of the driving speed.

1. PREPARATION BEFORE WORK

If another “DTC CONFIRMATION PROCEDURE" occurs just before, turn ignition switch OFF and wait for at least 10 seconds, then perform the next test.

>> GO TO 2.

2. CHECK DTC DETECTION

With CONSULT
1. Start the engine.
2. Drive the vehicle for 5 seconds or more.
3. Stop the vehicle.
   CAUTION:
   Never stop the engine.
4. Repeat step 2 through 3.
5. Check the DTC.

“P1586”detected?

YES >> Go to TM-153, "Diagnosis Procedure".
NO >> INSPECTION END

Diagnosis Procedure

INFOID:0000000012404531

1. CHECK G SENSOR SIGNAL

With CONSULT
1. Park the vehicle on a level surface.
2. Turn ignition switch ON.
3. Select “Data Monitor” in “TRANSMISSION”
4. Select “G SEN SLOPE”.
5. Swing the vehicle and check if value varies between –40.45% and 40.45%.

Monitor item	Condition	Standard
G SEN SLOPE	Flat road	0%
	Uphill	Positive value (Maximum 40.45%)
	Downhill	Negative value (Minimum –40.45%)

cardiagn.com

Is the inspection result normal?

YES >> GO TO 2.
NO >> GO TO 3.

2. G SENSOR CALIBRATION (PART 1)

With CONSULT

1. Select “Self Diagnostic Results” in “TRANSMISSION”.
2. Touch “Erase”.

>> Perform “G SENSOR CALIBRATION”. Refer to TM-80, "Description".

3. CHECK SENSOR POWER SUPPLY

1. Turn ignition switch OFF.
2. Disconnect G sensor connector.
3. Turn ignition switch ON.
4. Check voltage between G sensor harness connector terminal and ground.

+		–	Voltage (Approx.)
G sensor			
Connector	Terminal		
B39	3	Ground	5.0 V

Is the inspection result normal?

YES >> GO TO 4.
NO >> GO TO 8.

4. CHECK CIRCUIT BETWEEN TCM AND G SENSOR (PART 1)

1. Turn ignition switch OFF.
2. Disconnect TCM connector.
3. Check continuity between TCM harness connector terminals and G sensor harness connector terminals.

TCM		G sensor		Continuity
Connector	Terminal	Connector	Terminal	
F23	11	B39	2	Existed
	14		1	

Is the inspection result normal?

YES >> GO TO 5.
NO >> Repair or replace malfunctioning parts.

5. CHECK CIRCUIT BETWEEN TCM AND G SENSOR (PART 2)

Check continuity between TCM harness connector terminals and ground.

TCM		—	Continuity
Connector	Terminal		
F23	11	Ground	Not existed
	14		

Is the inspection result normal?

YES >> GO TO 6.
NO >> Repair or replace malfunctioning parts.

6. CHECK G SENSOR

1. Remove G sensor. Refer to TM-199, "Removal and Installation".
2. Connect the all connectors.
3. Turn ignition switch ON.

cardiagn.com

4. Check voltage between TCM harness connector terminal and ground.

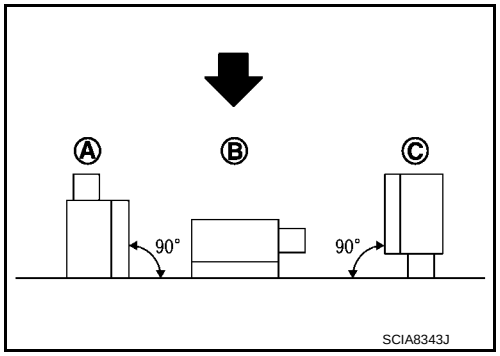

⬅ : Direction of gravitational force

+		–	Test condition	Voltage (Approx.)
TCM				
Connector	Terminal			
F23	14	Ground	Vertical (–1G) Ⓐ	1.17 V
			Horizontal Ⓑ	2.5 V
			Vertical (1G) Ⓒ	3.83 V

Is the inspection result normal?

YES >> GO TO 7.
NO >> Replace G sensor. Refer to TM-199, "Removal and Installation".

7. G SENSOR CALIBRATION (PART 2)

With CONSULT

1. Install G sensor. Refer to TM-199, "Removal and Installation".
2. Select “Self Diagnostic Results” in “TRANSMISSION”.
3. Touch “Erase”.

>> Perform “G SENSOR CALIBRATION”. Refer to TM-80, "Description".

8. CHECK SENSOR POWER SUPPLY CIRCUIT (PART 1)

1. Turn ignition switch OFF.
2. Disconnect TCM connector.
3. Check continuity between TCM harness connector terminal and G sensor harness connector terminal.

TCM		G sensor		Continuity
Connector	Terminal	Connector	Terminal	
F23	26	B39	3	Existed

Is the inspection result normal?

YES >> GO TO 9.
NO >> Repair or replace malfunctioning parts.

9. CHECK SENSOR POWER SUPPLY CIRCUIT (PART 2)

Check continuity between TCM harness connector terminal and ground.

TCM		—	Continuity
Connector	Terminal		
F23	26	Ground	Not existed

Is the inspection result normal?

YES >> Check intermittent incident. Refer to GI-41, "Intermittent Incident".
NO >> Repair or replace malfunctioning parts.

cardiagn.com

P1588 G SENSOR

DTC Logic

INFOID:0000000012404532

DTC DETECTION LOGIC

DTC	Trouble diagnosis name	DTC detection condition	Possible causes
P1588	G Sensor Circuit Range/Performance	When 1 is satisfied and 2 is satisfied two times within the same DC: 1. When all of the following conditions are satisfied and this state is maintained for 1 second: - TCM power supply voltage: More than 11 V - The difference between the current G sensor detection voltage and the previous G sensor detection voltage of 10 msec. before: ±0.015 V or less 2. When all of the following conditions are satisfied and this state is maintained for 5 seconds: - The difference between the current acceleration and the previous acceleration of 1 second before: 0.2677m/s^2 (0.0273 G) - The difference between the current G sensor detection voltage and the previous G sensor detection voltage of 10 msec. before: ±0.015 V or more	G Sensor

NOTE:
DC stands for “DRIVING CYCLE” and indicates a series of driving cycle of “Ignition switch OFF →ON → driving → OFF”.

DTC CONFIRMATION PROCEDURE

CAUTION:
Be careful of the driving speed.

1. PREPARATION BEFORE WORK

If another “DTC CONFIRMATION PROCEDURE" occurs just before, turn ignition switch OFF and wait for at least 10 seconds, then perform the next test.

>> GO TO 2.

2. CHECK DTC DETECTION

With CONSULT
1. Start the engine.
2. Select “Data Monitor” in “TRANSMISSION”.
3. Select “G SPEED”.
4. Drive the vehicle.
5. Maintain the following conditions for 5 seconds or more.

Selector lever	: “L” position
G SPEED	: 0.05 G or more

6. Stop the vehicle.
   CAUTION:
   Never stop the engine.
7. Repeat step 4 through 6.
8. Check the DTC.

“P1588” detected?

YES >> Go to TM-157, "Diagnosis Procedure".
NO >> INSPECTION END

cardiagn.com

Diagnosis Procedure

INFOID:0000000012404533

1. CHECK G SENSOR SIGNAL

With CONSULT
1. Park the vehicle on a level surface.
2. Turn ignition switch ON.
3. Select “Data Monitor” in “TRANSMISSION”
4. Select “G SEN SLOPE”.
5. Swing the vehicle and check if value varies between –40.45% and 40.45%.

Monitor item	Condition	Standard
G SEN SLOPE	Flat road	0%
	Uphill	Positive value (Maximum 40.45%)
	Downhill	Negative value (Minimum –40.45%)

Is the inspection result normal?

YES >> GO TO 2.
NO >> GO TO 3.

2. G SENSOR CALIBRATION (PART 1)

With CONSULT
1. Select “Self Diagnostic Results” in “TRANSMISSION”.
2. Touch “Erase”.

>> Perform “G SENSOR CALIBRATION”. Refer to TM-80, "Description".

3. CHECK G SENSOR

1. Remove G sensor. Refer to TM-199, "Removal and Installation".
2. Connect the all connectors.
3. Turn ignition switch ON.
4. Check voltage between TCM harness connector terminal and ground.

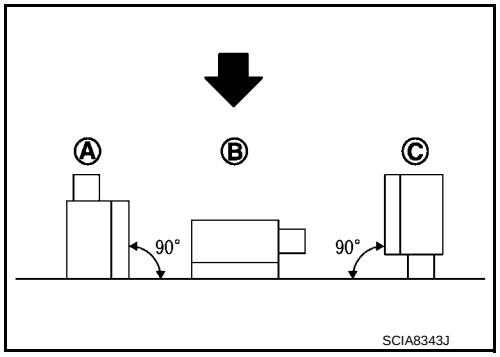

: Direction of gravitational force

+		–	Test condition	Voltage (Approx.)
TCM				
Connector	Terminal			
F23	14	Ground	Vertical (–1G) Ⓐ	1.17 V
			Horizontal Ⓑ	2.5 V
			Vertical (1G) Ⓒ	3.83 V

Is the inspection result normal?

YES >> GO TO 4.
NO >> Replace G sensor. Refer to TM-199, "Removal and Installation".

4. G SENSOR CALIBRATION (PART 2)

With CONSULT
1. Install G sensor. Refer to TM-199, "Removal and Installation".
2. Select “Self Diagnostic Results” in “TRANSMISSION”.
3. Touch “Erase”.

>> Perform “G SENSOR CALIBRATION”. Refer to TM-80, "Description".

cardiagn.com

P2765 INPUT SPEED SENSOR B

DTC Logic

INFOID:0000000012404534

DTC DETECTION LOGIC

DTC	CONSULT screen terms (Trouble diagnosis content)	DTC detection condition	Possible causes
P2765	INPUT SPEED SENSOR B (Input/Turbine Speed Sensor B Circuit)	When 1 is satisfied and any of 2, 3 or 4 is satisfied and this state is maintained for 5 seconds: 1. When all of the following conditions are satisfied: - TCM power supply voltage: More than 11 V - After range change completion, it spends 2 seconds or more. 2. When all of the following conditions are satisfied and this state is maintained for 5 seconds: - Secondary pulley speed: Less than 149 rpm - Primary pulley speed: 1,000 rpm or more 3. When all of the following conditions are satisfied and this state is maintained for 0.5 seconds: - 10-msec-ago secondary pulley speed: 1000 rpm or more - Now secondary pulley speed: 0 rpm 4. When all of the following conditions are satisfied and this state is maintained for 5 seconds: - Range: D or DS - Engine speed: 450 rpm or more - Primary pulley speed: 300 rpm or more - Secondary pulley speed: 300 rpm or more - Input speed: 300 rpm or more - The difference between engine speed and primary pulley speed is 1,000 rpm or less - The difference between engine speed and input speed is 1,000 rpm or less - The difference between primary pulley speed and input speed is 1,000 rpm or less - Lock-up command is being given (except for slip lock-up) - DTC other than the applicable DTC is not detected. - When any of following items are satisfied: • Primary pulley speed/secondary pulley speed: More than 2.9 • Primary pulley speed/secondary pulley speed: Less than 0.3	• Harness or connector (Output speed sensor circuit is open or shorted) • Output speed sensor

DTC CONFIRMATION PROCEDURE

CAUTION:

Be careful of the driving speed.

1. PREPARATION BEFORE WORK

If another "DTC CONFIRMATION PROCEDURE" occurs just before, turn ignition switch OFF and wait for at least 10 seconds, then perform the next test.

cardiagn.com

>> GO TO 2.

2. CHECK DTC DETECTION

1. Start the engine.
2. Drive the vehicle.
3. Maintain the following conditions for 10 seconds or more.

Selector lever	: “D” position
Engine speed	: 1,200 rpm or more
Vehicle speed	: 55 km/h (34 MPH) or more

4. Stop the vehicle.
5. Check the first trip DTC.

Is “P2765” detected?

YES >> Go to TM-159, "Diagnosis Procedure".
NO >> INSPECTION END

Diagnosis Procedure

INFOID:0000000012404535

1. CHECK OUTPUT SPEED SENSOR POWER CIRCUIT

1. Turn ignition switch OFF.
2. Disconnect output speed sensor connector.
3. Turn ignition switch ON.
4. Check voltage between output speed sensor harness connector terminal and ground.

+		–	Voltage
Output speed sensor			
Connector	Terminal		
F19	3	Ground	10 – 16 V

Is the inspection result normal?

YES >> GO TO 2.
NO >> GO TO 6.

2. CHECK OUTPUT SPEED SENSOR GROUND CIRCUIT

Check continuity between output speed sensor harness connector terminal and ground.

Output speed sensor		—	Continuity
Connector	Terminal		
F19	1	Ground	Existed

Is the inspection result normal?

YES >> GO TO 3.
NO >> Repair or replace malfunctioning parts.

3. CHECK CIRCUIT BETWEEN OUTPUT SPEED SENSOR AND TCM (PART 1)

1. Turn ignition switch OFF.
2. Disconnect TCM connector.
3. Check continuity between output speed sensor harness connector terminal and TCM harness connector terminal.

Output speed sensor		TCM		Continuity
Connector	Terminal	Connector	Terminal	
F19	2	F23	34	Existed

Is the inspection result normal?

cardiagn.com

YES >> GO TO 4.
NO >> Repair or replace malfunctioning parts.

4. CHECK CIRCUIT BETWEEN OUTPUT SPEED SENSOR AND TCM (PART 2)

Check continuity between output speed sensor harness connector terminal and ground.

Output speed sensor		—	Continuity
Connector	Terminal		
F19	2	Ground	Not existed

Is the inspection result normal?

YES >> GO TO 5.
NO >> Repair or replace malfunctioning parts.

5. CHECK TCM INPUT SIGNALS

1. Connect all of disconnected connectors.
2. Lift the vehicle.
3. Start the engine.
4. Check frequency of output speed sensor.

+		–	Condition	Standard
TCM				
Connector	Terminal			
F23	34	Ground	• Selector lever: “L” position • Vehicle speed: 20 km/h (12 MPH)	Approx. 200 Hz 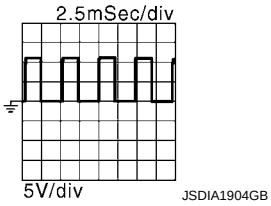

Is the inspection result normal?

YES >> Check intermittent incident. Refer to GI-41, "Intermittent Incident".
NO >> Replace output speed sensor. Refer to TM-203, "Removal and Installation".

6. DETECT MALFUNCTIONING ITEMS

Check the following items:

- Harness open circuit or short circuit between ignition switch and IPDM E/R. Refer to PG-58, "Wiring Diagram - IGNITION POWER SUPPLY -".
- Harness open circuit or short circuit between output speed sensor and IPDM E/R.
- 10A fuse (No.43, located in the IPDM E/R). Refer to PG-99, "Fuse, Connector and Terminal Arrangement".
- IPDM E/R

Is the check result normal?

YES >> Check intermittent incident. Refer to GI-41, "Intermittent Incident".
NO >> Repair or replace malfunctioning parts.

cardiagn.com

P2813 SELECT SOLENOID

DTC Logic

INFOID:0000000012404536

DTC DETECTION LOGIC

DTC	CONSULT screen terms (Trouble diagnosis content)	DTC detection condition	Possible causes
P2813	SELECT SOLENOID (Select solenoid)	When any of 1, or 2 is satisfied: 1. When all the following conditions are established three times in 1DC - Precondition • DTC other than the applicable DTC is not detected. • Throtte position: More than 6.27 deg. • Vehicle speed: Less than 3 km/h (1 MPH) • CVT fluid temperature: More than 20°C (68°F) • Selector lever: Other than P, N • Turbine speed when performed N → D, N (P) → R: More than 500 rpm • TCM power supply voltage: More than 11 V - Detection time • N → D: 0.4 seconds • N → R: 0.3 seconds • P → R: 0.3 seconds 2. When all of the following conditions are satisfied and this state is maintained for 30 seconds: - The counting of time continues while all of the following conditions are satisfied and stops when the conditions become unsatisfied (the count is maintained). When accumulated time reaches 30 seconds (Clutch is judged as engaged and the count is reset.) • Selector lever: Other than P, N • Vehicle speed: Less than 3 km/h (1 MPH) • Differences between primary pulley speed and secondary speed speed: Less than 120 rpm • Clutch instructions pressure: 0.95 MPa or more • Differences between turbine speed and input speed speed: Less than 200 rpm • Turbine speed – speed: More than 450 rpm • DTC other than the applicable DTC is not detected. • TCM power supply voltage: More than 11 V	Select solenoid valve

NOTE:
DC stands for “DRIVING CYCLE” and indicates a series of driving cycle of “Ignition switch OFF → ON → driving → OFF”.

DTC CONFIRMATION PROCEDURE

CAUTION:
Be careful of the driving speed.

1. PREPARATION BEFORE WORK

cardiagn.com

If another "DTC CONFIRMATION PROCEDURE" occurs just before, turn ignition switch OFF and wait for at least 10 seconds, then perform the next test.

>> GO TO 2.

2. CHECK DTC DETECTION 1

1. Start the engine.
2. Maintain the following conditions. (Keep 30seconds or more after the selector lever shifted.)

Selector lever	: N→ D, N → R, P→ R

3. Check the first trip DTC.

Is “P2813”detected?

YES >> Go to TM-162, "Diagnosis Procedure".
NO >> INSPECTION END

Diagnosis Procedure

INFOID:0000000012404537

1. CHECK INTERMITTENT INCIDENT

Refer to GI-41, "Intermittent Incident".

Is the inspection result normal?

YES >> Replace transaxle assembly. Refer to TM-215, "Removal and Installation".
NO >> Repair or replace malfunctioning parts.

cardiagn.com

P2814 SELECT SOLENOID

DTC Logic

INFOID:0000000012404538

DTC DETECTION LOGIC

DTC	CONSULT screen terms (Trouble diagnosis content)	DTC detection condition	Possible causes
P2814	SELECT SOLENOID (Select solenoid)	When all of the following conditions are satisfied and this state is maintained for 0.48 seconds: • TCM power supply voltage: 11 V or more • TCM judges that solenoid valve circuit is shorted to ground.	• Harness or connector (Select solenoid valve circuit shorted to ground) • Select solenoid valve

DTC CONFIRMATION PROCEDURE

CAUTION:

Be careful of the driving speed.

1. PREPARATION BEFORE WORK

If another "DTC CONFIRMATION PROCEDURE" occurs just before, turn ignition switch OFF and wait for at least 10 seconds, then perform the next test.

>> GO TO 2.

2. CHECK DTC DETECTION

1. Start the engine.
2. Maintain the following conditions. (Keep 5 seconds or more after the selector lever shifted.)

Selector lever N → D, N → R, P → R

3. Check the first trip DTC.

Is “P2814” detected?

YES >> Go to TM-163, "Diagnosis Procedure".
NO >> INSPECTION END

Diagnosis Procedure

INFOID:0000000012404539

1. CHECK CIRCUIT BETWEEN TCM AND CVT UNIT

1. Turn ignition switch OFF.
2. Disconnect TCM connector and CVT unit connector.
3. Check continuity between TCM harness connector terminal and ground.

TCM		—	Continuity
Connector	Terminal		
F23	37	Ground	Not existed

Is the inspection result normal?

YES >> GO TO 2.
NO >> Repair or replace damaged parts.

2. CHECK CIRCUIT BETWEEN CVT UNIT AND GROUND

Check continuity between CVT unit harness connector terminal and ground.

cardiagn.com

CVT unit		—	Condition	Resistance
Connector	Terminal			
F250	4	Ground	CVT fluid temperature: 20°C (68°F)	5.5 – 7.0 Ω
			CVT fluid temperature: 50°C (122°F)	6.0 – 8.0 Ω
			CVT fluid temperature: 80°C (176°F)	6.5 – 8.5 Ω

Is the inspection result normal?

YES >> Check intermittent incident. Refer to GI-41, "Intermittent Incident".
NO >> GO TO 3.

3. CHECK CIRCUIT BETWEEN CVT UNIT AND CONTROL VALVE

1. Disconnect control valve connector. Refer to TM-193, "Exploded View".
2. Check continuity between CVT unit harness connector terminal and control valve harness connector terminal.

CVT unit		Control valve		Continuity
Connector	Terminal	Connector	Terminal	
F250	4	F251	4	Existed

Is the inspection result normal?

YES >> GO TO 4.
NO >> Replace terminal cord assembly. Refer to TM-194, "Removal and Installation".

4. CHECK CIRCUIT BETWEEN CONTROL VALVE AND GROUND

Check continuity between CVT unit harness connector terminal and ground.

Control valve	—	Condition	Resistance
Terminal			
4	Ground	CVT fluid temperature: 20°C (68°F)	5.5 – 7.0 Ω
		CVT fluid temperature: 50°C (122°F)	6.0 – 8.0 Ω
		CVT fluid temperature: 80°C (176°F)	6.5 – 8.5 Ω

Is the inspection result normal?

YES >> Check intermittent incident. Refer to GI-41, "Intermittent Incident".
NO >> There is malfunction of select solenoid solenoid valve. Replace transaxle assembly. Refer to TM-215, "Removal and Installation".

cardiagn.com

P2815 SELECT SOLENOID

DTC Logic

INFOID:0000000012404540

DTC DETECTION LOGIC

DTC	CONSULT screen terms (Trouble diagnosis content)	DTC detection condition	Possible causes
P2815	SELECT SOLENOID (Select solenoid)	When all of the following conditions are satisfied and this state is maintained for 0.2 seconds: • TCM power supply voltage: More than 11 V • TCM judges that solenoid valve circuit is open. • P2814 is not detected.	• Harness or connector (Select solenoid valve circuit open or shorted to power supply) • Select solenoid valve

DTC CONFIRMATION PROCEDURE

1. PREPARATION BEFORE WORK

If another "DTC CONFIRMATION PROCEDURE" occurs just before, turn ignition switch OFF and wait for at least 10 seconds, then perform the next test.

>> GO TO 2.

2. CHECK DTC DETECTION

1. Start the engine.
2. Maintain the following conditions. (Keep 5 seconds or more after the selector lever shifted.)

Selector lever N → D, N → R, P → R

3. Check the first trip DTC.

Is “P2815” detected?

YES >> Go to TM-165, "Diagnosis Procedure".
NO >> INSPECTION END

Diagnosis Procedure

INFOID:0000000012404541

1. CHECK CIRCUIT BETWEEN TCM AND CVT UNIT

1. Turn ignition switch OFF.
2. Disconnect TCM connector and CVT unit connector.
3. Check continuity between TCM harness connector terminal and ground.

TCM		CVT unit		Continuity
Connector	Terminal	Connector	Terminal	
F23	37	F24	4	Existed

Is the inspection result normal?

YES >> GO TO 2.
NO >> Repair or replace damaged parts.

2. CHECK CIRCUIT BETWEEN CVT UNIT AND GROUND

Check continuity between CVT unit harness connector terminal and ground.

cardiagn.com

CVT unit		—	Condition	Resistance
Connector	Terminal			
F250	4	Ground	CVT fluid temperature: 20°C (68°F)	5.5 – 7.0 Ω
			CVT fluid temperature: 50°C (122°F)	6.0 – 8.0 Ω
			CVT fluid temperature: 80°C (176°F)	6.5 – 8.5 Ω

Is the inspection result normal?

YES >> Check intermittent incident. Refer to GI-41, "Intermittent Incident".
NO >> GO TO 3.

3. CHECK CIRCUIT BETWEEN CVT UNIT AND CONTROL VALVE

1. Disconnect control valve connector. Refer to TM-193, "Exploded View".
2. Check continuity between CVT unit harness connector terminal and control valve harness connector terminal.

CVT unit		Control valve		Continuity
Connector	Terminal	Connector	Terminal	
F250	4	F251	4	Existed

Is the inspection result normal?

YES >> GO TO 4.
NO >> Replace terminal cord assembly. Refer to TM-194, "Removal and Installation".

4. CHECK CIRCUIT BETWEEN CONTROL VALVE AND GROUND

Check continuity between CVT unit harness connector terminal and ground.

Control valve	—	Condition	Resistance
Terminal			
4	Ground	CVT fluid temperature: 20°C (68°F)	5.5 – 7.0 Ω
		CVT fluid temperature: 50°C (122°F)	6.0 – 8.0 Ω
		CVT fluid temperature: 80°C (176°F)	6.5 – 8.5 Ω

Is the inspection result normal?

YES >> Check intermittent incident. Refer to GI-41, "Intermittent Incident".
NO >> There is malfunction of select solenoid solenoid valve. Replace transaxle assembly. Refer to TM-215, "Removal and Installation".

cardiagn.com

MAIN POWER SUPPLY AND GROUND CIRCUIT

Diagnosis Procedure

INFOID:0000000012404542

1. CHECK TCM POWER CIRCUIT (PART 1)

1. Turn ignition switch OFF.
2. Disconnect TCM connector.
3. Check voltage between TCM harness connector terminals and ground.

+		–	Voltage
TCM			
Connector	Terminal		
F23	45	Ground	10 – 16 V
	46		

Is the inspection result normal?

YES >> GO TO 2.
NO >> GO TO 4.

2. CHECK TCM POWER CIRCUIT (PART 2)

Check voltage between TCM harness connector terminals and ground.

+		–	Condition	Voltage
TCM				
Connector	Terminal			
F23	47	Ground	Ignition switch ON	10 – 16 V
			Ignition switch OFF	Approx. 0 V
	48		Ignition switch ON	10 – 16 V
			Ignition switch OFF	Approx. 0 V

Is the inspection result normal?

YES >> GO TO 3.
NO >> GO TO 5.

3. CHECK TCM GROUND CIRCUIT

Check continuity between TCM harness connector terminals and ground.

TCM		—	Continuity
Connector	Terminal		
F23	41	Ground	Existed
	42		

Is the inspection result normal?

YES >> Check intermittent incident. Refer to GI-41, "Intermittent Incident".
NO >> Repair or replace malfunctioning parts.

4. DETECT MALFUNCTION ITEMS (PART 1)

Check the following items:

- Open or short circuit in harness between battery positive terminal and TCM connector terminal 45, and 46.
- 10A fuse (No.11, located in the fuse and fusible link block). Refer to PG-98, "Fuse and Fusible Link Arrangement".

Is the inspection result normal?

YES >> Check intermittent incident. Refer to GI-41, "Intermittent Incident".
NO >> Repair or replace malfunctioning parts.

cardiagn.com

5. CHECK CIRCUIT BETWEEN IPDM E/R AND TCM (PART 1)

1. Turn ignition switch OFF.
2. Disconnect IPDM E/R connector.
3. Check continuity between IPDM E/R harness connector terminal and TCM harness connector terminals.

IPDM E/R		TCM		Continuity
Connector	Terminal	Connector	Terminal	
F12	58	F23	47	Existed
			48	

Is the check result normal?

YES >> GO TO 6.
NO >> Repair or replace malfunctioning parts.

6. CHECK CIRCUIT BETWEEN IPDM E/R AND TCM (PART 2)

Check continuity between IPDM E/R harness connector terminal and ground.

IPDM E/R		—	Continuity
Connector	Terminal		
F12	58	Ground	Not existed

Is the check result normal?

YES >> GO TO 7.
NO >> Repair or replace malfunctioning parts.

7. DETECT MALFUNCTIONING ITEMS (PART 2)

Check the following items:

- Open or short circuit in harness between ignition switch and IPDM E/R. Refer to PG-58, "Wiring Diagram - IGNITION POWER SUPPLY -".
- 10A fuse (No.43, located in the IPDM E/R). Refer to PG-99, "Fuse, Connector and Terminal Arrangement".
- IPDM E/R

Is the check result normal?

YES >> Check intermittent incident. Refer to GI-41, "Intermittent Incident".
NO >> Repair or replace malfunctioning parts.

cardiagn.com

SHIFT POSITION INDICATOR CIRCUIT

Component Function Check

INFOID:0000000012404543

1. CHECK SHIFT POSITION INDICATOR

1. Start the engine.
2. Check that correct selector lever position (“P”, “R”, “N”, “D”, “L”) is displayed as selector lever is moved into each position.

Is the inspection result normal?

YES >> INSPECTION END
NO >> Go to TM-169, "Diagnosis Procedure".

Diagnosis Procedure

INFOID:0000000012404544

1. CHECK INPUT SIGNALS

With CONSULT
1. Start the engine.
2. Select “Data Monitor” in “TRANSMISSION”.
3. Select “RANGE”.
4. Check that correct selector lever position (“P”, “R”, “N”, “D”, “L”) is displayed as selector lever is moved into each position.

Is the inspection result normal?

YES >> INSPECTION END
NO-1 (The actual gear position changes, but the shift position indicator is not indicated.)>>Perform “Self Diagnostic Results” in “TRANSMISSION”.
NO-2 (The actual gear position and the indication on the shift position indicator do not coincide.)>>Perform “Self Diagnostic Results” in “TRANSMISSION”.
NO-3 (Only a specific position or positions is/are not indicated on the shift position indicator.)>>Check the combination meter. Refer to MWI-36, "CONSULT Function".

cardiagn.com

OVERDRIVE CONTROL SWITCH

Component Function Check

INFOID:0000000012404545

1. CHECK O/D OFF INDICATOR LAMP

When ignition switch is turned ON, check that O/D OFF indicator lamp in combination meter illuminates during 2 seconds approximately.

Is the inspection result normal?

YES >> GO TO 2.
NO >> Go to TM-172, "Diagnosis Procedure".

2. CHECK OVERDRIVE CONTROL SWITCH

1. Shift the selector lever to “D” position.
2. When overdrive control switch is operated, check that O/D OFF indicator lamp in combination meter illuminates/extinguishes.

Is the inspection result normal?

YES >> INSPECTION END.
NO >> Go to TM-170, "Diagnosis Procedure".

Diagnosis Procedure

INFOID:0000000012404546

1. CHECK OVERDRIVE CONTROL SWITCH CIRCUIT

1. Turn ignition switch OFF.
2. Disconnect the CVT shift selector connector.
3. Turn ignition switch ON.
4. Check the voltage between CVT shift selector harness connector terminals.

CVT shift selector			Voltage (Approx.)
Connector	+	–	
	Terminal		
M57	1	4	12 V

Is the inspection result normal?

YES >> GO TO 2.
NO >> GO TO 4.

2. CHECK OVERDRIVE CONTROL SWITCH

Check the overdrive control switch. Refer to TM-171, "Component Inspection (Overdrive Control Switch)".

Is the inspection result normal?

YES >> GO TO 3.
NO >> Repair or replace damaged parts.

3. CHECK CVT SHIFT SELECTOR HARNESS

Check the continuity between harness plate (A) and CVT shift selector (B).

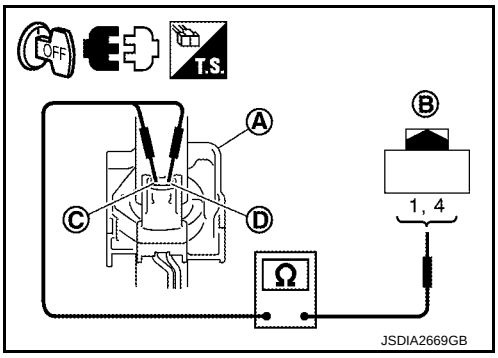

Harness plate	CVT shift selector	Continuity
	Terminal	
C	1	Existed
D	4	

Is the inspection result normal?

YES >> Check intermittent incident. Refer to GI-41, "Intermittent Incident".
NO >> Replace the CVT shift selector assembly. Refer to TM-187, "Removal and Installation".

cardiagn.com

4. CHECK GROUND CIRCUIT

Check the continuity between CVT shift selector harness connector terminal and ground.

CVT shift selector		—	Continuity
Connector	Terminal		
M57	4	Ground	Existed

Is the inspection result normal?

YES >> GO TO 5.
NO >> Repair or replace damaged parts.

5. CHECK HARNESS BETWEEN CVT SHIFT SELECTOR AND COMBINATION METER

1. Turn ignition switch OFF.
2. Disconnect the combination meter connector.
3. Check the continuity between CVT shift selector harness connector terminal and combination meter harness connector terminal.

CVT shift selector		Combination meter		Continuity
Connector	Terminal	Connector	Terminal	
M57	1	M34	32	Existed

4. Check continuity between CVT shift selector harness connector terminal and ground.

CVT shift selector		—	Continuity
Connector	Terminal		
M57	1	Ground	Not existed

Is the inspection result normal?

YES >> GO TO 6.
NO >> Repair or replace damaged parts.

6. CHECK COMBINATION METER INPUT SIGNAL

1. Connect all of the disconnected connectors.
2. Turn ignition switch ON.
3. Select “Data Monitor” in “METER/M&A”.
4. Select “O/D OFF SW”.
5. Check that “O/D OFF SW” turns ON/OFF when overdrive control switch is operated. Refer to MWI-41, "Reference Value".

Is the inspection result normal?

YES >> Check intermittent incident. Refer to GI-41, "Intermittent Incident".
NO >> Replace the combination meter. Refer to MWI-96, "Removal and Installation".

Component Inspection (Overdrive Control Switch)

INFOID:0000000012404547

1. CHECK OVERDRIVE CONTROL SWITCH

Check the continuity between wires of select lever knob (1).

Condition	Continuity
Overdrive control switch is depressed	Existed
Overdrive control switch is released	Not existed

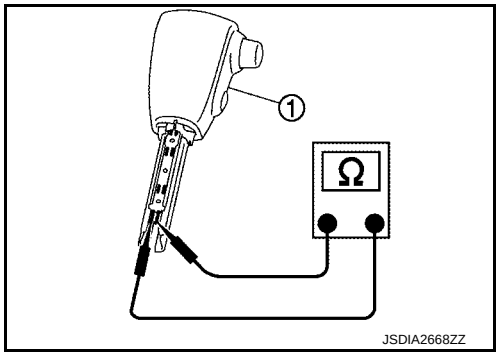

Is the inspection result normal?

YES >> INSPECTION END
NO >> Replace the selector lever knob. Refer to TM-187, "Removal and Installation".

cardiagn.com

OD OFF INDICATOR LAMP

Component Function Check

INFOID:0000000012404548

1. CHECK O/D OF INDICATOR LAMP

When ignition switch is turned ON, check that O/D OFF indicator lamp in combination meter illuminates during 2 seconds approximately.

Is the inspection result normal?

YES >> INSPECTION END
NO >> Go to TM-172, "Diagnosis Procedure".

Diagnosis Procedure

INFOID:0000000012404549

1. CHECK DTC (TCM)

With CONSULT
1. Turn ignition switch ON.
2. Check “Self Diagnostic Results” in “TRANSMISSION”.

Is any DTC detected?

YES >> Check DTC detected item. Refer to TM-59, "DTC Index".
NO >> GO TO 2.

2. CHECK DTC (COMBINATION METER)

With CONSULT
Check “Self Diagnostic Results” in “METER/M&A”.

Is any DTC detected?

YES >> Check DTC detected item. Refer to MWI-49, "DTC Index".
NO >> GO TO 3.

3. CHECK COMBINATION METER INPUT SIGNAL

With CONSULT
1. Shift the selector lever to “D” position.
2. Select “Data Monitor” in “METER/M&A”.
3. Select “O/D OFF IND”.
4. Check that “O/D OFF IND” turns ON/OFF when overdrive control switch is operated. Refer to MWI-41, "Reference Value".

Is the inspection result normal?

YES >> Replace the combination meter. Refer to MWI-96, "Removal and Installation".
NO >> GO TO 4.

4. CHECK TCM INPUT/OUTPUT SIGNAL

With CONSULT
1. Select “Data Monitor” in “TRANSMISSION”.
2. Select “SPORT MODE SW”.
3. Check that “SPORT MODE SW” turns ON/OFF when overdrive control switch is operated. Refer to TM-48, "Reference Value".

Is the inspection result normal?

YES >> Replace the combination meter. Refer to MWI-96, "Removal and Installation".
NO >> Check the overdrive control switch. Refer to TM-170, "Diagnosis Procedure".

cardiagn.com

SHIFT LOCK SYSTEM

Component Function Check

INFOID:0000000012404550

1. CHECK CVT SHIFT LOCK OPERATION

1. Turn ignition switch ON.
2. Move selector lever to “P” position.
3. Attempt to shift selector lever to any other position with brake pedal released.

Can selector lever be shifted to any other position?

YES >> Go to TM-173, "Diagnosis Procedure".
NO >> GO TO 2.

2. CHECK CVT SHIFT LOCK OPERATION

Attempt to shift selector lever to any other position with brake pedal depressed.

Can the selector lever be shifted to any other position?

YES >> INSPECTION END
NO >> Go to TM-173, "Diagnosis Procedure".

Diagnosis Procedure

INFOID:0000000012404551

1. CHECK POWER SOURCE

1. Turn ignition switch OFF.
2. Disconnect the fuse block (J/B) connector.
3. Turn ignition switch ON.
4. Check the voltage between fuse block (J/B) connector terminal and ground.

+		-	Voltage (Approx.)
Fuse block (J/B)			
Connector	Terminal		
E100	4F	Ground	10 – 16 V

Is the inspection result normal?

YES >> GO TO 2.
NO >> Check the following.
- 10A fuse [No. 3, located in fuse block (J/B)]
- Ignition switch

2. CHECK HARNESS BETWEEN FUSE BLOCK (J/B) AND STOP LAMP SWITCH (PART 1)

1. Turn ignition switch OFF.
2. Disconnect the stop lamp switch connector.
3. Check continuity between fuse block (J/B) harness connector terminal and stop lamp switch harness connector terminal.

Fuse block (J/B)		Stop lamp switch		Continuity
Connector	Terminal	Connector	Terminal	
E100	4F	E126	3	Existed

Is the inspection result normal?

YES >> GO TO 3.
NO >> Repair or replace damaged parts.

3. CHECK HARNESS BETWEEN FUSE BLOCK (J/B) AND STOP LAMP SWITCH (PART 2)

Check continuity between stop lamp switch harness connector terminal and ground.

cardiagn.com

Stop lamp switch		—	Continuity
Connector	Terminal		
E126	3	Ground	Not existed

Is the inspection result normal?

YES >> GO TO 4.
NO >> Repair or replace damaged parts.

4. CHECK STOP LAMP SWITCH

Check the stop lamp switch. Refer to TM-175, "Component Inspection (Stop Lamp Switch)".

Is the inspection result normal?

YES >> GO TO 5.
NO >> Replace stop lamp switch. Refer to BR-20, "Removal and Installation".

5. CHECK HARNESS BETWEEN STOP LAMP SWITCH AND CVT SHIFT SELECTOR (PART 1)

1. Disconnect the CVT shift selector connector.
2. Check the continuity between stop lamp switch harness connector terminal and CVT shift selector harness connector terminal.

Stop lamp switch		CVT shift selector		Continuity
Connector	Terminal	Connector	Terminal	
E126	4	M57	6	Existed

Is the inspection result normal?

YES >> GO TO 6.
NO >> Repair or replace damaged parts.

6. CHECK HARNESS BETWEEN STOP LAMP SWITCH AND CVT SHIFT SELECTOR (PART 2)

Check the continuity between control harness connector terminal and ground.

CVT shift selector		—	Continuity
Connector	Terminal		
M57	6	Ground	Not existed

Is the inspection result normal?

YES >> GO TO 7.
NO >> Repair or replace damaged parts.

7. CHECK GROUND CIRCUIT

Check the continuity between CVT shift selector harness connector terminal and ground.

CVT shift selector		—	Continuity
Connector	Terminal		
M57	7	Ground	Existed

Is the inspection result normal?

YES >> GO TO 8.
NO >> Repair or replace damaged parts.

8. CHECK CVT SHIFT SELECTOR

1. Shift selector lever to “P” position.
2. Check the continuity between CVT shift selector connector terminals.

CVT shift selector			Continuity
Connector	Terminal		
M57	6	7	Existed

Is the inspection result normal?

cardiagn.com

YES >> GO TO 9.
NO >> Replace CVT shift selector. Refer to TM-187, "Removal and Installation".

9. CHECK SHIFT LOCK SOLENOID

1. Remove the shift lock unit. Refer to TM-188, "Disassembly and Assembly".
2. Check the shift lock solenoid. Refer to TM-175, "Component Inspection (Shift Lock Solenoid)".

Is the inspection result normal?

YES >> INSPECTION END
NO >> Repair or replace damaged parts.

Component Inspection (Stop Lamp Switch)

INFOID:0000000012404552

1. CHECK STOP LAMP SWITCH

Check the continuity between stop lamp switch connector terminals.

Stop lamp switch		Condition	Continuity
Terminal			
3	4	Depressed brake pedal	Existed
		Released brake pedal	Not existed

Is the inspection result normal?

YES >> INSPECTION END
NO >> Replace the stop lamp switch. Refer to BR-20, "Removal and Installation".

Component Inspection (Shift Lock Solenoid)

INFOID:0000000012404553

1. CHECK SHIFT LOCK SOLENOID

Apply voltage to CVT shift selector connector terminals and then check that shift lock solenoid is activated.

CAUTION:

Connect the fuse between the terminals when applying the voltage.

+ (fuse)	-	Condition	Status
CVT shift selector connector			
Terminal			
6	7	• Park switch: ON • Apply 12 V direct current between terminals 6 and 7.	Shift lock solenoid operates

Is the inspection result normal?

YES >> INSPECTION END
NO >> Replace the shift lock unit. Refer to TM-188, "Disassembly and Assembly".

cardiagn.com

SYMPTOM DIAGNOSIS

CVT CONTROL SYSTEM

Symptom Table

INFOID:0000000012404554

- The diagnosis item number indicates the order of check. Start checking in the order from 1.
- Perform diagnoses of symptom table 1 before symptom table 2.

Symptom Table 1

Symptom		Engine system	CAN communication line (U1000)	Transmission range switch (P0705, P0706)	Input speed sensor (P0717)	Primary speed sensor (P0715)	Output speed sensor (P2765)	CVT fluid temperature sensor (P0711, P0712, P0713)	Primary pressure sensor (P084C, P084D)	Secondary pressure sensor (P0841, P0847, P0848)	Torque converter clutch solenoid valve (P0740, P0743, P0744)	Stall test	CVT position	Power supply	Control valve	CVT fluid level and state	Ignition switch and starter
		EC-103	TM-59									TM-82	TM-83	TM-167	TM-215	TM-182	PG-58, STR-6
Shift Shock	Large shock (N→ D position)	1	4	7				3			6		2		8	5	
	Large shock (N→ R position)	1	4	7				3			6		2		8	5	
	Shock is too large for lock-up.	2	3								6		1		5	4	
Slips/Will Not Engage	Vehicle cannot be started from D position.	8	3		5	6	7	9	10	11		4	2	12	13	1	
	Vehicle cannot be started from R position.	8	3		5	6	7	9	10	11		4	2	12	13	1	
	Does not lock-up.	2	6	8	3	4	10	9	11	12	5	7			13	1	
	Does not hold lock-up condition.	2	6	8	3	4	10	9	11	12	5	7			13	1	
	Lock-up is not released.	2	6		3	4					5	7			8	1	
	With selector lever in D position, acceleration is extremely poor.	3	4	5	7	8	9	12	10	11		2	6	13	14	1	
	With selector lever in R position, acceleration is extremely poor.	3	4	5	7	8	9	12	10	11		2	6	13	14	1	
	Slips at lock-up.	2	6	8	3	4	10	9	11	12	5	7			13	1	

cardiagn.com

Symptom		Engine system	CAN communication line (U1000)	Transmission range switch (P0705, P0706)	Input speed sensor (P0717)	Primary speed sensor (P0715)	Output speed sensor (P2765)	CVT fluid temperature sensor (P0711, P0712, P0713)	Primary pressure sensor (P084C, P084D)	Secondary pressure sensor (P0841, P0847, P0848)	Torque converter clutch solenoid valve (P0740, P0743, P0744)	Stall test	CVT position	Power supply	Control valve	CVT fluid level and state	Ignition switch and starter
		EC-103	TM-59									TM-82	TM-83	TM-167	TM-215	TM-182	PG-58, STR-6
Other	No creep at all.	2	4	3	7	8	9	10	11	12		5	6	13	14	1	
	Vehicle cannot run in any position.	8		2	5	6	7	9	10	11		3	4	12	13	1	
	With selector lever in D position, driving is not possible.	8		2	5	6	7	9	10	11		3	4	12	13	1	
	With selector lever in R position, driving is not possible.	8		2	5	6	7	9	10	11		3	4	12	13	1	
	Judder occurs during lock-up.	2	6		3	4	5				7				8	1	
	Strange noise in D position.	2	3												4	1	
	Strange noise in R position.	2	3												4	1	
	Strange noise in N position.	2	3												4	1	
	Vehicle does not decelerate by engine brake.	7	3		4	5	6						2		8	1	
	Maximum speed low.	2	3		5	6	7		8	9	11	4			10	1	
	With selector lever in P position, vehicle does not enter parking condition or, with selector lever in another position, parking condition is not cancelled.			1									2				
	Vehicle runs with CVT in P position.			1									3		4	2	
	Vehicle runs with CVT in N position.			1									3		4	2	
	Engine stall.	2	6		3	4			8	9	5	7			10	1	
	Engine stalls when selector lever shifted N → D or R.	2	6		3	4					5				7	1	
	Engine speed does not return to idle.	2	4				3								5	1	
	Engine does not start in N or P position.			3									2				1
	Engine starts in positions other than N or P.			3									2				1

cardiagn.com

Symptom Table 2

Symptom		Torque converter	Transmission range switch	Oil pump	Forward clutch	Reverse brake	Planetary gear	Bearings	Parking mechanism	Stop lamp switch	Shift lock solenoid	CVT shift selector
		TM-219	TM-215							BR-21	TM-173	TM-187
Shift Shock	Large shock (N→ D position)		2		1							
	Large shock (N→ R position)		2			1						
	Shock is too large for lock-up.	1										
Slips/Will Not Engage	Vehicle cannot be started from D position.		3	1	2							
	Vehicle cannot be started from R position.		4	1		2			3			
	Does not lock-up.	1	3	2								
	Does not hold lock-up condition.	1	3	2								
	Lock-up is not released.	1		2								
	With selector lever in D position, acceleration is extremely poor.	1	3		2							
	With selector lever in R position, acceleration is extremely poor.	1	4	2		3						
	Slips at lock-up.	1		2								

cardiagn.com

Symptom		Torque converter	Transmission range switch	Oil pump	Forward clutch	Reverse brake	Planetary gear	Bearings	Parking mechanism	Stop lamp switch	Shift lock solenoid	CVT shift selector
		TM-219	TM-215							BR-21	TM-173	TM-187
Other	No creep at all.	1	6	2	4	5	3					
	Vehicle cannot run in all positions.	1		2	4	5	3		6			
	With selector lever in D position, driving is not possible.	1		2	4		3		5			
	With selector lever in R position, driving is not possible.	1		2		4	3		5			
	Judder occurs during lock-up.	1										
	Strange noise in D position.	1		2	4		3	5				
	Strange noise in R position.	1		2		4	3					
	Strange noise in N position.	1		2			3					
	Maximum speed low.	1	5	2	4		3					
	With selector lever in P position, vehicle does not enter parking condition or, with selector lever in another position, parking condition is not cancelled.								1			
	Vehicle runs with CVT in P position.						2		1			
	Vehicle runs with CVT in N position.				2	3	1					
	Engine stall.	1										
	Engine stalls when selector lever shifted N → D or R.	1										
	When brake pedal is depressed with ignition switch ON, selector-lever cannot be shifted from P position to other position.									1	2	3
	When brake pedal is not depressed with ignition switch ON, selector lever can be shifted from P position to other position.									1	2	3

cardiagn.com

PERIODIC MAINTENANCE

CVT FLUID

Inspection

INFOID:0000000012404555

FLUID LEAKAGE

- Check transaxle surrounding area (oil seal and plug etc.)for fluid leakage.
- If anything is found, repair or replace damaged parts and adjust CVT fluid level. Refer to TM-182, "Adjustment".

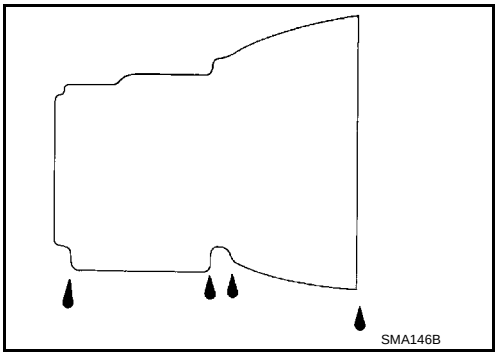

Replacement

INFOID:0000000012404556

Recommended fluid and fluid capacity : Refer to MA-10, "Fluids and Lubricants".

CAUTION:

- **Always use shop paper. Never use shop cloth.**
- **Replace a drain plug gasket with new ones at the final stage of the operation when installing.**
- **Use caution when looking into the drain hole as there is a risk of dripping fluid entering the eye.**
- **After replacement, always perform CVT fluid leakage check.**

1. Select “Data Monitor” in “TRANSMISSION” using CONSULT.
2. Select “FLUID TEMP” and confirm that the CVT fluid temperature is 40°C (104°F) or less.
3. Check that the selector lever is in the “P” position, then completely engage the parking brake.
4. Lift up the vehicle.
5. Remove the drain plug and drain the CVT fluid from the oil pan. Refer to TM-193, "Exploded View".
6. Install the drain plug to oil pan.
   CAUTION:
   Drain plug gasket use the old one.
7. Remove the overflow plug (1) from converter housing.

   ⇦ : Vehicle front

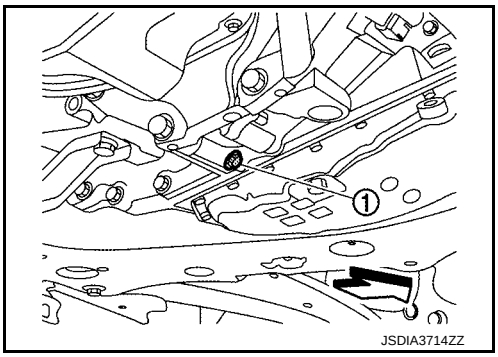

cardiagn.com

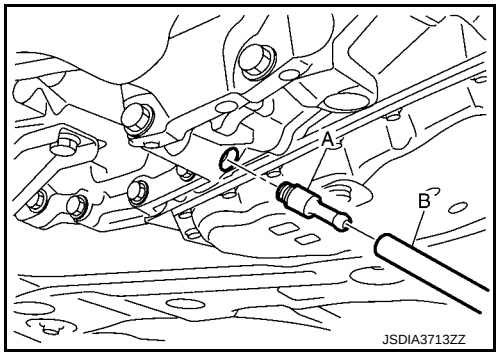

8. Install the charging pipe set (KV311039S0) (A) into the overflow plug hole.
   CAUTION:
   Tighten the charging pipe by hand.
9. Install the ATF changer hose (B) to the charging pipe.
   CAUTION:
   Press the ATF changer hose all the way onto the charging pipe until it stops.
10. Fill approximately 3 liter (2-5/8 Imp qt) of the CVT fluid.
11. Remove the ATF changer hose and charging pipe, then install the overflow plug.
    NOTE:
    Perform this work quickly because CVT fluid leaks.
12. Lift down the vehicle.
13. Start the engine.
14. While depressing the brake pedal, shift the selector lever to the entire position from “P” to “L”, and shift it to the “P” position.
    NOTE:
    Hold the lever at each position for 5 seconds.
15. Check that the CONSULT “Data Monitor” in “FLUID TEMP” is 35°C (95°F) to 45°C (113°F).
16. Stop the engine.
17. Lift up the vehicle.
18. Remove the drain plug, and then drain CVT fluid from oil pan.
19. Repeat steps 6 to 18 (one time).
20. Tighten the drain plug to the specified torque. Refer to TM-193, "Exploded View".
21. Remove the overflow plug.
22. Install the charging pipe set (KV311039S0) into the overflow plug hole.
    CAUTION:
    Tighten the charging pipe by hand.
23. Install the ATF changer hose to the charging pipe.
    CAUTION:
    Press the ATF changer hose all the way onto the charging pipe until it stops.
24. Fill approximately 3 liter (2-5/8 Imp qt) of the CVT fluid.
25. Remove the ATF changer hose and charging pipe, then install the overflow plug.
    NOTE:
    Perform this work quickly because CVT fluid leaks.
26. Lift down the vehicle.
27. Start the engine.
28. While depressing the brake pedal, shift the selector lever to the entire position from “P” to “L”, and shift it to the “P” position.
    NOTE:
    Hold the lever at each position for 5 seconds.
29. Check that the CONSULT “Data Monitor” in “FLUID TEMP” is 35°C (95°F) to 45°C (113°F).
30. Lift up the vehicle.
31. Remove the overflow plug and confirm that the CVT fluid is drained from the overflow plug hole.
    CAUTION:
    Perform this work with the vehicle idling.
    NOTE:
    If the CVT fluid is not drained, refer to “Adjustment” and refill with the CVT fluid.
32. When the flow of CVT fluid slows to a drip, tighten the overflow plug to the specified torque. Refer to TM-193, "Exploded View".
    CAUTION:
    Never reuse O-ring.
33. Lift down the vehicle.

cardiagn.com

34. Select “Data Monitor” in “TRANSMISSION” using CONSULT.
35. Select “CONFORM CVTF DETERIORTN”.
36. Select “Erase”.
37. Stop the engine.

Adjustment

INFOID:0000000012404557

Recommended fluid and fluid capacity : Refer to MA-10, "Fluids and Lubricants".

CAUTION:
- **During adjustment of the CVT fluid level, check CONSULT so that the oil temperature may be maintained from 35 to 45°C (95 to 113°F).**
- **Maintain specified engine idle speed during CVT fluid level adjustment. Refer to EC-514, "Idle Speed".**
- **Use caution when looking into the drain hole as there is a risk of dripping fluid entering the eye.**

1. Check that the selector lever is in the “P” position, then completely engage the parking brake.
2. Start the engine.
3. Adjust the CVT fluid temperature to be approximately 40°C (104°F).
   NOTE:
   The CVT fluid is largely affected by temperature. Therefore be sure to use CONSULT and check the “FLUID TEMP” under “TRANSMISSION” in “Data Monitor” while adjusting.
4. While depressing the brake pedal, shift the selector lever to the entire position from “P” to “L”, and shift it to the “P” position.
   NOTE:
   Hold the lever at each position for 5 seconds.
5. Lift up the vehicle.
6. Check that there is no CVT fluid leakage.
7. Remove the overflow plug (1) from converter housing.

   ⇦ : Vehicle front

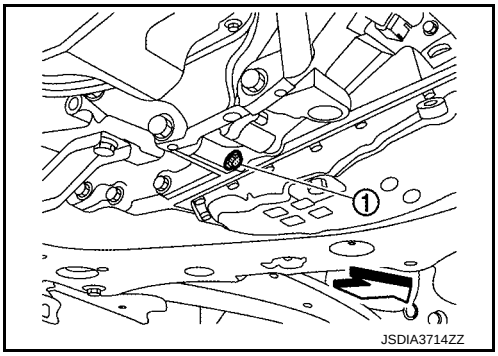

8. Install the charging pipe set (KV311039S0) (A) into the overflow plug hole.
   CAUTION:
   Tighten the charging pipe by hand.
9. Install the ATF changer hose (B) to the charging pipe.
   CAUTION:
   Press the ATF changer hose all the way onto the charging pipe until it stops.
10. Fill approximately 0.5 liter (1/2 Imp qt) of the CVT fluid.
11. Remove the ATF changer hose from the charging pipe, and check that the CVT fluid drains out from the charging pipe. If it does not drain out, perform charging again.
    CAUTION:
    Perform this work with the vehicle idling.

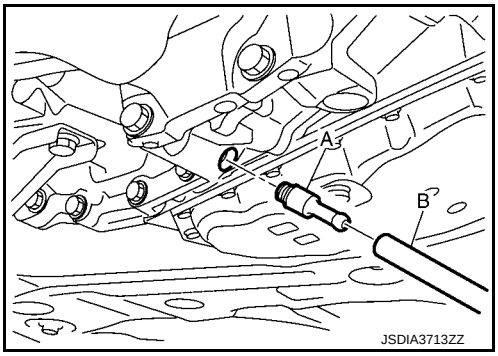

12. When the flow of CVT fluid slows to a drip, remove the charging pipe from the converter housing.
13. Tighten the overflow plug to the specified torque. Refer to TM-193, "Exploded View".
    CAUTION:
    Never reuse O-ring.

cardiagn.com

14. Lift down the vehicle.
15. Stop the engine.

cardiagn.com

CVT FLUID COOLER SYSTEM

Cleaning

INFOID:0000000012404558

Whenever an automatic transaxle is repaired, overhauled, or replaced, the CVT fluid cooler mounted in the radiator must be inspected and cleaned.
Metal debris and friction material, if present, can be trapped or be deposited in the CVT fluid cooler. This debris can contaminate the newly serviced CVT or, in severe cases, can block or restrict the flow of CVT fluid. In either case, malfunction of the newly serviced CVT may occur.
Debris, if present, may deposit as CVT fluid enters the cooler inlet. It will be necessary to back flush the cooler through the cooler outlet in order to flush out any built up debris.

CVT FLUID COOLER CLEANING PROCEDURE

1. Position an oil pan under the transaxle's inlet and outlet cooler hoses.
2. Identify the inlet and outlet fluid cooler hoses.
3. Disconnect the fluid cooler inlet and outlet rubber hoses from the steel cooler tubes or bypass valve.
   NOTE:
   Replace the cooler hoses if rubber material from the hose remains on the tube fitting.
4. Allow any CVT fluid that remains in the cooler hoses to drain into the oil pan.

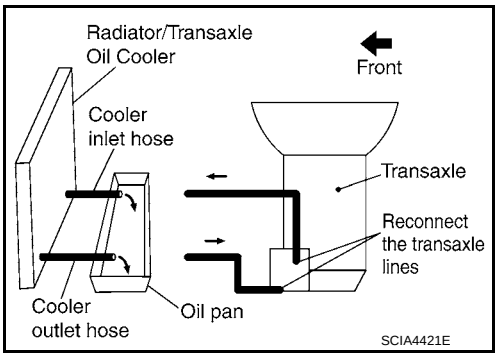

5. Insert the extension adapter hose of a can of Transmission Cooler Cleaner into the cooler outlet hose.
   CAUTION:
   - **Wear safety glasses and rubber gloves when spraying the Transmission Cooler Cleaner.**
   - **Spray Transmission Cooler Cleaner only with adequate ventilation.**
   - **Avoid contact with eyes and skin.**
   - **Do not breath vapors or spray mist.**
6. Hold the hose and can as high as possible and spray Transmission Cooler Cleaner in a continuous stream into the cooler outlet hose until CVT fluid flows out of the cooler inlet hose for 5 seconds.

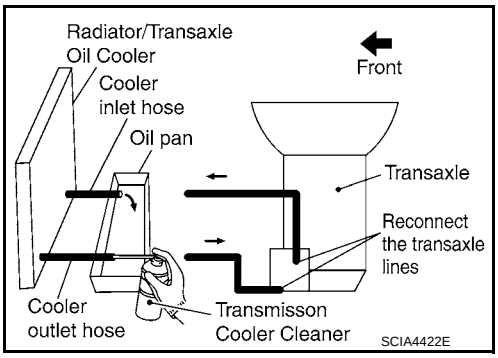

7. Insert the tip of an air gun into the end of the cooler outlet hose.
8. Wrap a shop rag around the air gun tip and end of the cooler outlet hose.
9. Blow compressed air regulated to 5 to 9 kg/cm^2 (70 to 130 psi) through the cooler outlet hose for 10 seconds to force out any remaining CVT fluid.
10. Repeat steps 5 through 9 three additional times.
11. Position an oil pan under the banjo bolts that connect the CVT fluid cooler steel lines to the transaxle.
12. Remove the banjo bolts.

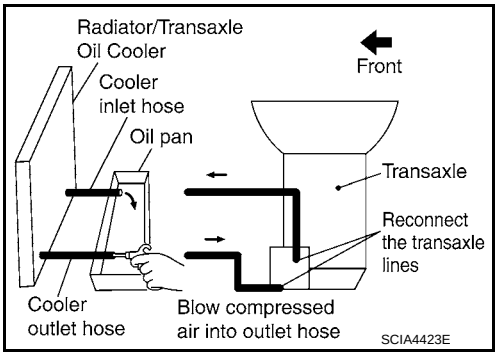

13. Flush each steel line from the cooler side back toward the transaxle by spraying Transmission Cooler Cleaner in a continuous stream for 5 seconds.
14. Blow compressed air regulated to 5 to 9 kg/cm^2 (70 to 130 psi) through each steel line from the cooler side back toward the transaxle for 10 seconds to force out any remaining CVT fluid.
15. Ensure all debris is removed from the steel cooler lines.
16. Ensure all debris is removed from the banjo bolts and fittings.

cardiagn.com

17. Perform “CVT FLUID COOLER DIAGNOSIS PROCEDURE”.

CVT FLUID COOLER DIAGNOSIS PROCEDURE

NOTE:
Insufficient cleaning of the cooler inlet hose exterior may lead to inaccurate debris identification.

1. Position an oil pan under the transaxle's inlet and outlet cooler hoses.
2. Clean the exterior and tip of the cooler inlet hose.
3. Insert the extension adapter hose of a can of Transmission Cooler Cleaner into the cooler outlet hose.
   CAUTION:
   - **Wear safety glasses and rubber gloves when spraying the Transmission Cooler Cleaner.**
   - **Spray Transmission Cooler Cleaner only with adequate ventilation.**
   - **Avoid contact with eyes and skin.**
   - **Do not breath vapors or spray mist.**
4. Hold the hose and can as high as possible and spray Transmission Cooler Cleaner in a continuous stream into the cooler outlet hose until CVT fluid flows out of the cooler inlet hose for 5 seconds.

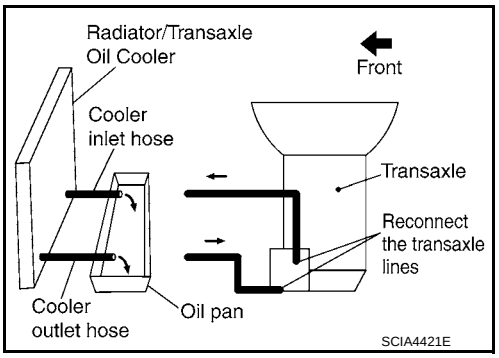

5. Tie a common white, basket-type coffee filter to the end of the cooler inlet hose.

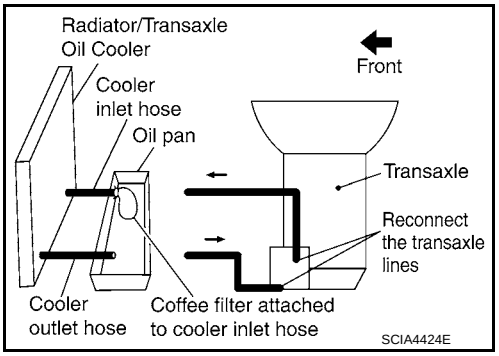

6. Insert the tip of an air gun into the end of the cooler outlet hose.
7. Wrap a shop rag around the air gun tip and end of cooler outlet hose.
8. Blow compressed air regulated to 5 to 9 kg/cm^2 (70 to 130 psi) through the cooler outlet hose to force any remaining CVT fluid into the coffee filter.
9. Remove the coffee filter from the end of the cooler inlet hose.
10. Perform “CVT FLUID COOLER INSPECTION PROCEDURE”.

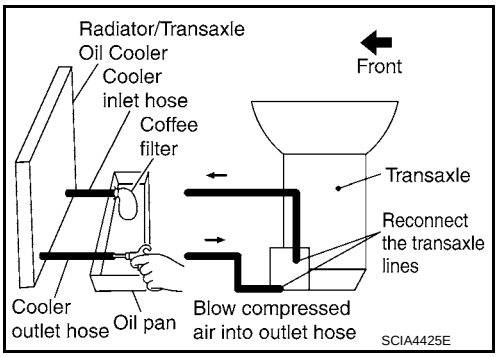

CVT FLUID COOLER INSPECTION PROCEDURE

1. Inspect the coffee filter for debris.

a. If small metal debris less than 1 mm (0.040 in) in size or metal powder is found in the coffee filter, this is normal. If normal debris is found, the CVT fluid cooler/radiator can be reused and the procedure is ended.

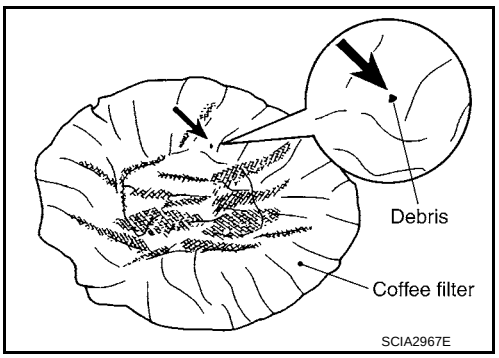

cardiagn.com

b. If one or more pieces of debris are found that are over 1 mm (0.040 in) in size and/or peeled clutch facing material is found in the coffee filter, the fluid cooler is not serviceable. The radiator/ fluid cooler must be replaced and the inspection procedure is ended.

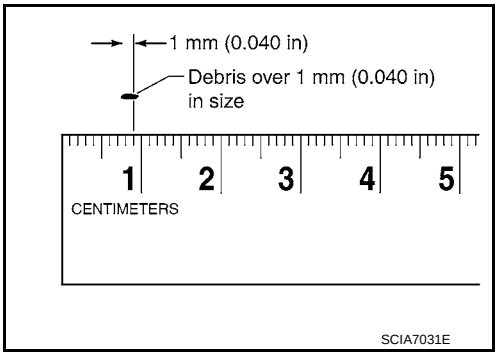

CVT FLUID COOLER FINAL INSPECTION

After performing all procedures, ensure that all remaining oil is cleaned from all components.

cardiagn.com

REMOVAL AND INSTALLATION

CVT SHIFT SELECTOR

Exploded View

INFOID:0000000012404559

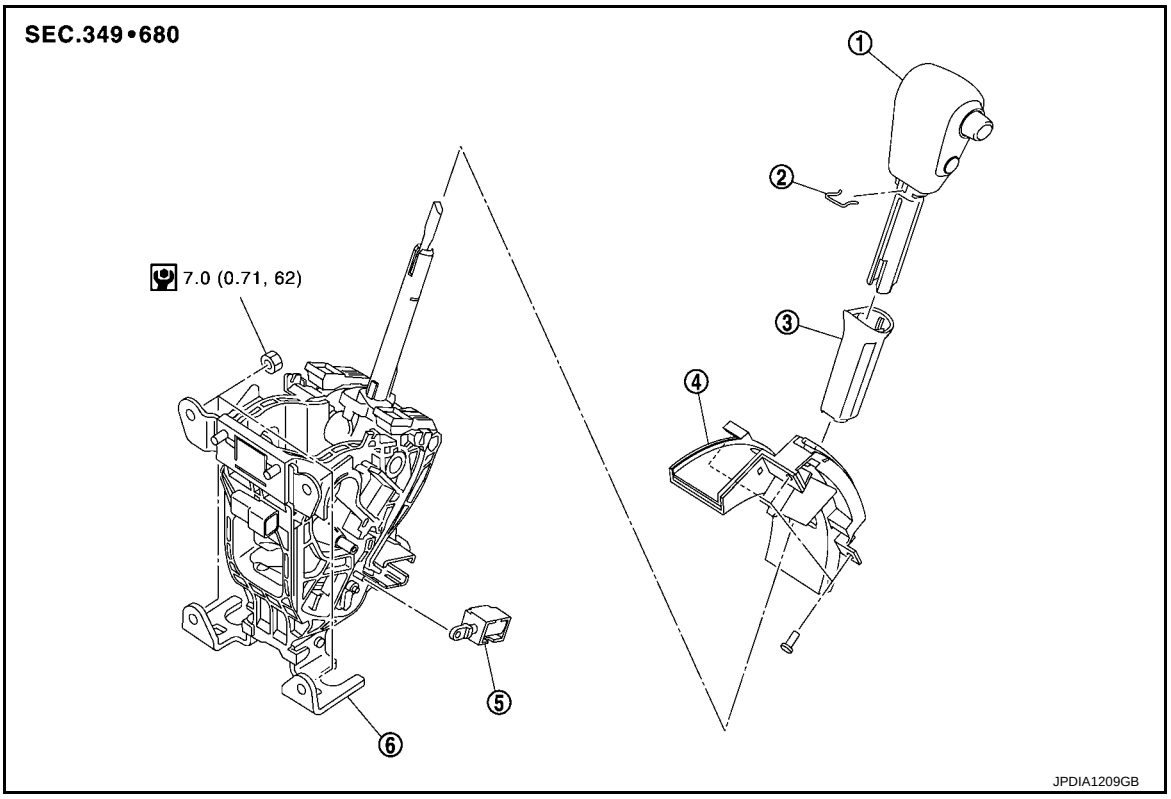

① Selector lever knob
② Lock pin
③ Knob cover
④ Slide plate
⑤ Shift lock solenoid
⑥ CVT shift selector assembly

: N·m (kg-m, in-lb)

Removal and Installation

INFOID:0000000012404560

REMOVAL

CAUTION:

Always apply the parking brake before performing removal and installation.

1. Disconnect the battery cable from the negative terminal. Refer to PG-136, "Removal and Installation".
2. Move selector lever to “N” position.

   CAUTION:

   When pushing shift lock release button, warp waste around the tip of flat screw driver to prevent damage.

cardiagn.com

3. Slide knob cover (1) below selector lever downward.
   CAUTION:
   Be careful not to damage knob cover.
4. Pull lock pin (2) out of selector lever knob (3).
5. Remove selector lever knob and knob cover.
6. Remove cluster lid C. Refer to IP-14, "Removal and Installation".
7. Disconnect CVT shift selector connector.

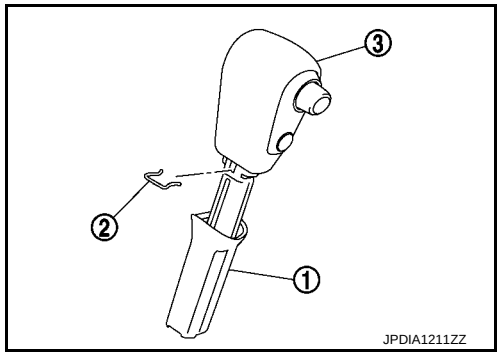

8. Remove control cable (1) from CVT shift selector assembly (2).

   A : The ribbed

9. Remove CVT shift selector assembly.

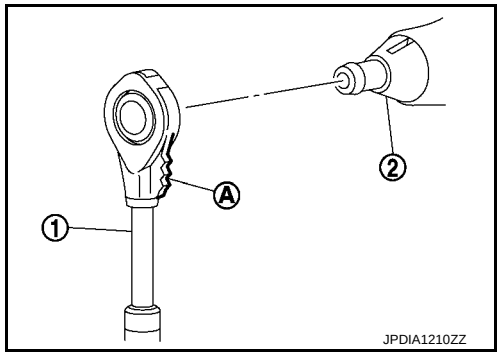

INSTALLATION

Note the following, and install in the reverse order of removal.

- When installing control cable (1) to CVT shift selector assembly (2), check that control cable is fully pressed in with the ribbed (A) surface facing rearward.

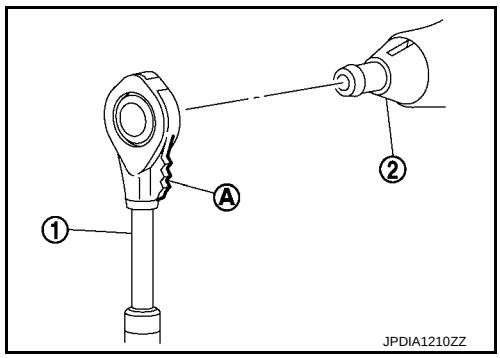

- Refer to the followings when installing the selector lever knob to the CVT shift selector assembly.

1. Install the lock pin (2) to the selector lever knob (3).
2. Install the knob cover (1) to the selector lever knob.
3. Insert the selector lever knob into the CVT shift selector assembly until it clicks.
   CAUTION:
   - **When pressing the selector lever knob onto the selector lever, never press the selector lever knob button.**
   - **Never strike the selector lever knob to press it into place.**
4. After installing the selector lever knob to the CVT shift selector assembly, check that the pulling on the selector lever knob does not disconnect it.

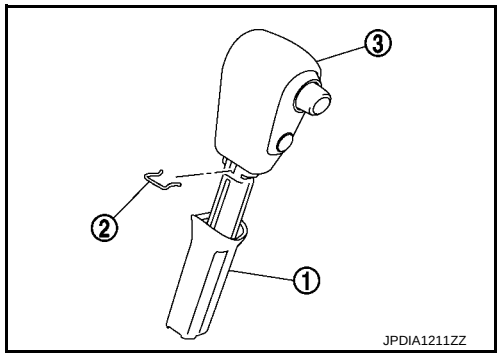

Disassembly and Assembly

INFOID:0000000012404561

Disassembly

1. Remove slide plate from cluster lid C.
2. Disconnect the shift lock solenoid connector.
3. Remove shift lock solenoid from CVT shift selector assembly.

cardiagn.com

Assembly

Assembly in the reverse order of disassembly.

Inspection and Adjustment

INFOID:0000000012404562

ADJUSTMENT AFTER INSTALLATION

Adjust the CVT positions after installing CVT shift selector assembly. Refer to TM-83, "Inspection and Adjustment".

INSPECTION AFTER INSTALLATION

Check the CVT positions after adjusting the CVT positions. Refer to TM-83, "Inspection and Adjustment".

cardiagn.com

CONTROL CABLE

Exploded View

INFOID:0000000012404563

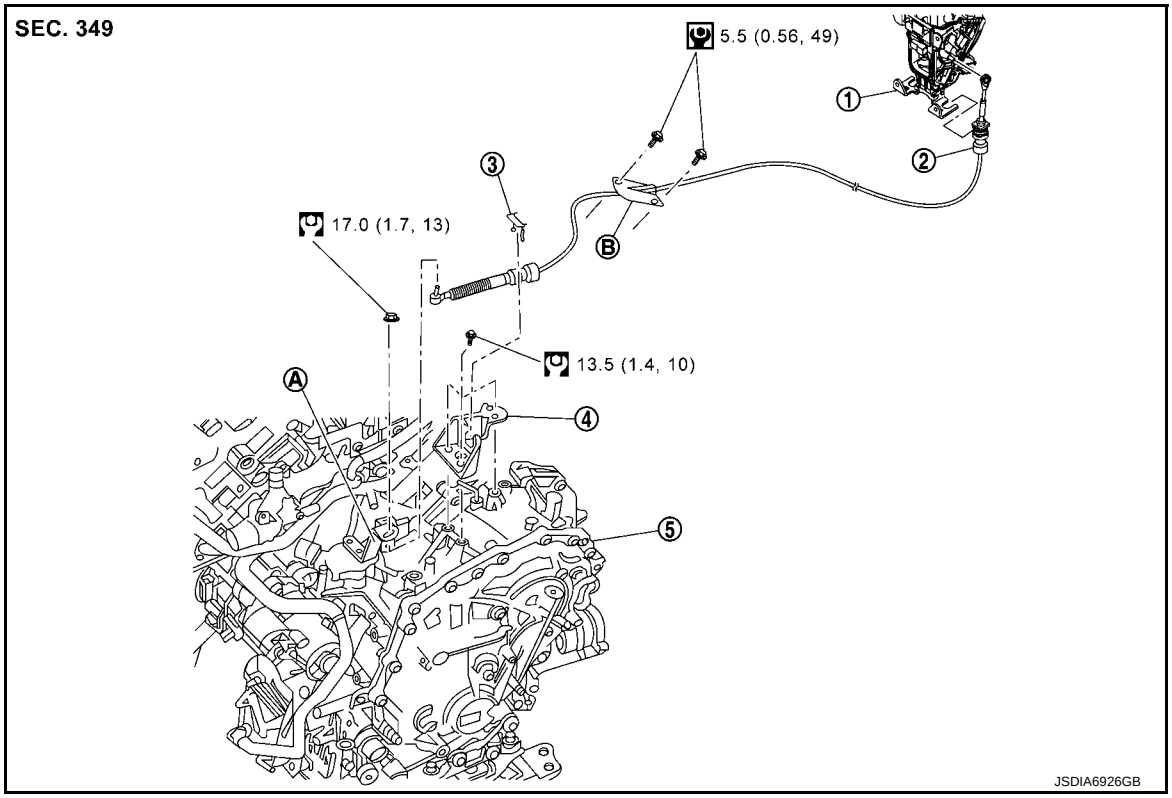

① CVT shift selector assembly	② Control cable	③ Lock plate
④ Bracket	⑤ Transaxle assembly	
Ⓐ Manual lever	Ⓑ Retainer	

: N·m (kg-m, ft-lb)

: N·m (kg-m, in-lb)

Removal and Installation

INFOID:0000000012404564

REMOVAL

CAUTION:

Always apply the parking brake before performing removal and installation.

1. Disconnect the battery cable from the negative terminal. Refer to PG-136, "Removal and Installation".
2. Remove control cable from CVT shift selector assembly. Refer to TM-187, "Removal and Installation".
3. Remove air duct (inlet) and air cleaner case. Refer to EM-27, "Removal and Installation".
4. Remove the control cable nut (⬅), using suitable tool.
5. Remove control cable (2) from manual lever (A).
6. Remove the lock plate (3) from control cable (2).
7. Remove control cable (2) from bracket (1).
8. Remove instrument lower cover center. Refer to IP-14, "Removal and Installation".

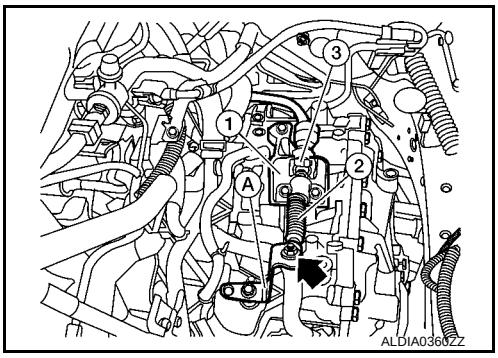

cardiagn.com

9. Remove bolts (⬅) of retainer (A).
10. Remove the control cable from the vehicle.
11. Remove bracket from transaxle assembly.

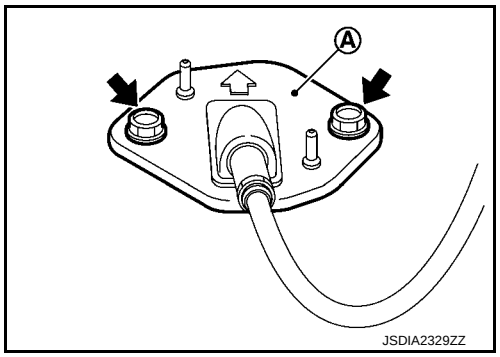

INSTALLATION

Note the following, and install in the reverse order of removal.

- When installing control cable (1) to CVT shift selector assembly (2), check that control cable is fully pressed in with the ribbed (A) surface facing rearward.

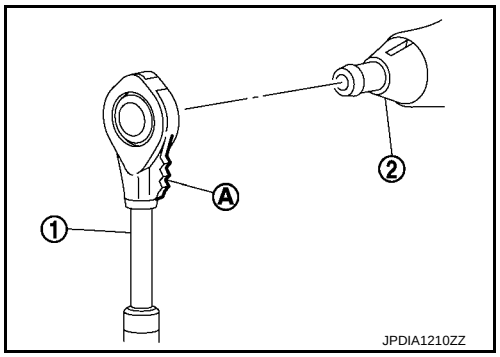

- Install the socket (A) onto the CVT shift selector assembly.

CAUTION:

- **Place the socket onto the CVT shift lever, then fasten it in place from above.**
- **Check that the pulling on the socket does not disconnect it.**

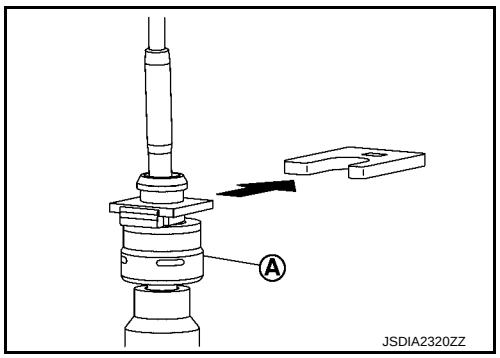

Inspection and Adjustment

INFOID:0000000012404565

ADJUSTMENT AFTER INSTALLATION

Adjust the CVT positions after installing control cable. Refer to TM-83, "Inspection and Adjustment".

INSPECTION AFTER INSTALLATION

Check the CVT positions after adjusting the CVT positions. Refer to TM-83, "Inspection and Adjustment".

cardiagn.com

TCM

Exploded View

INFOID:0000000012404566

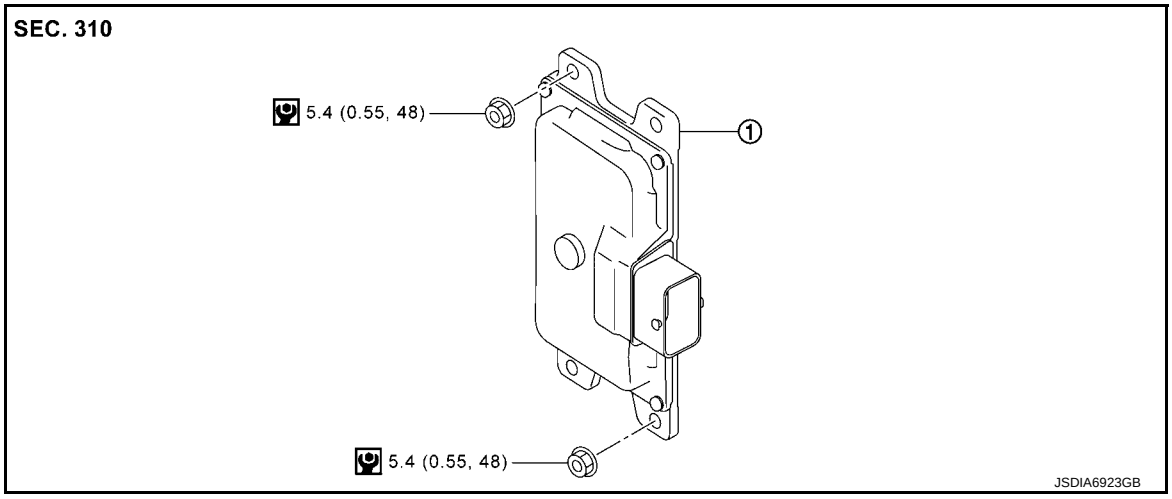

1 TCM

: N·m (kg-m, in-lb)

Removal and Installation

INFOID:0000000012404567

REMOVAL

CAUTION:

- **Never impact on TCM when removing or installing TCM.**
- **When replacing TCM, perform "ADDITIONAL SERVICE WHEN REPLACING TCM". Refer to TM-74, "Work Procedure".**
- **When replacing TCM and transaxle assembly simultaneously, perform "ADDITIONAL SERVICE WHEN REPLACING TCM AND TRANSAXLE ASSEMBLY". Refer to TM-76, "Work Procedure".**
- **When replacing TCM, note the “CVTF DETERIORATION DATE” value displayed on CONSULT “CONFORM CVTF DETERIORTN” in MAINTENANCE BOOKLET, before start the operation.**

1. Disconnect the battery cable from the negative terminal. Refer to PG-136, "Removal and Installation".
2. Remove air duct (inlet). Refer to EM-27, "Removal and Installation".
3. Move battery harness to a place to keep the harness clear of working area.
4. Disconnect TCM connector.
5. Remove TCM.

INSTALLATION

Install in the reverse order of removal.

Adjustment

INFOID:0000000012404568

ADJUSTMENT AFTER INSTALLATION

Perform “ADDITIONAL SERVICE WHEN REPLACING TCM”. Refer to TM-74, "Work Procedure".

cardiagn.com

CONTROL VALVE

Exploded View

INFOID:0000000012404569

COMPONENT PARTS LOCATION

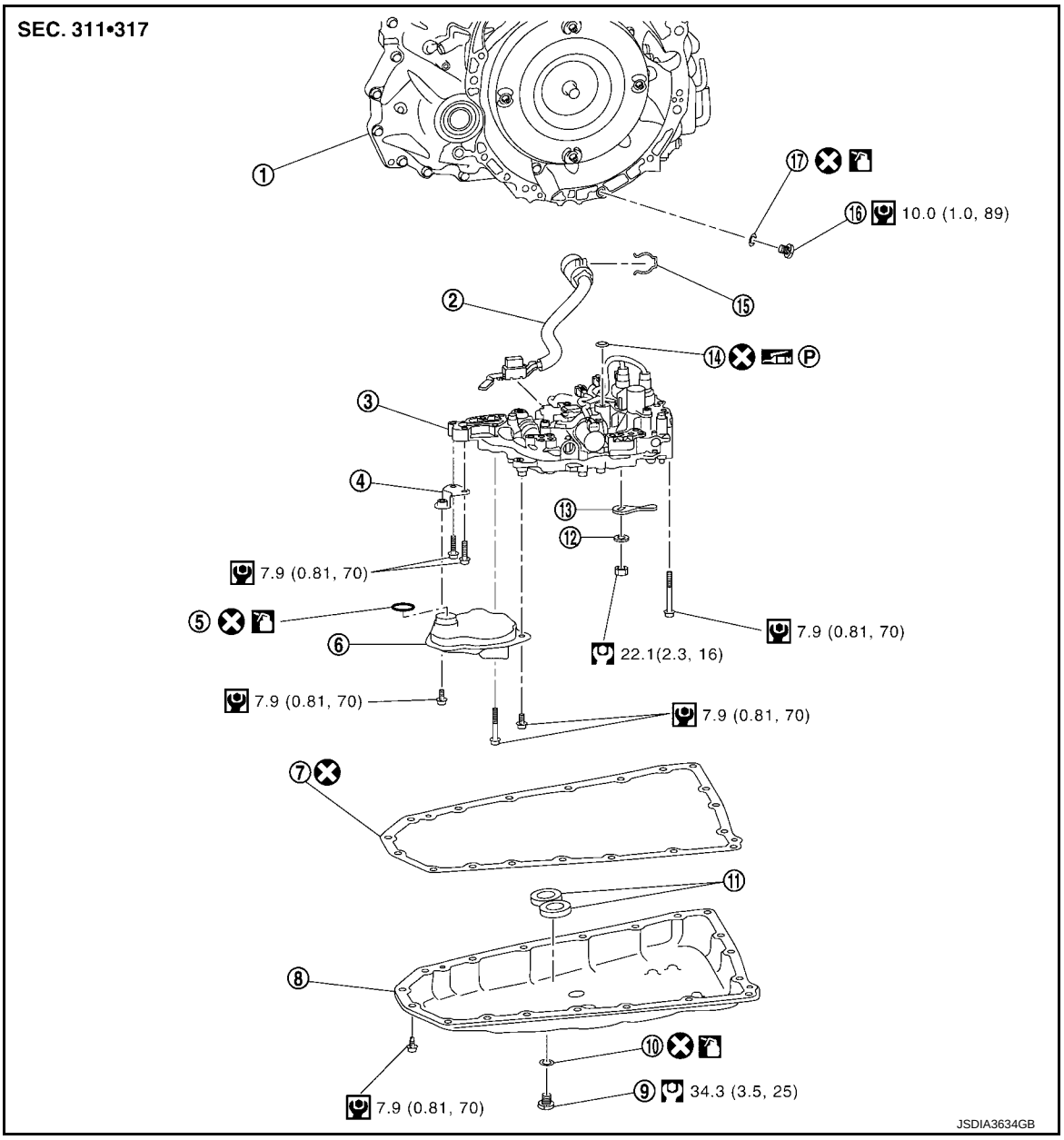

①	Transaxle assembly	②	Terminal cord assembly	③	Control valve
④	Bracket	⑤	O-ring	⑥	Oil strainer assembly
⑦	Oil pan gasket	⑧	Oil pan	⑨	Drain plug
⑩	Drain plug gasket	⑪	Magnet	⑫	Spring washer
⑬	Manual plate	⑭	Lip seal	⑮	Snap ring
⑯	Overflow plug	⑰	O-ring		

: Always replace after every disassembly.

: N·m (kg-m, ft-lb)

: N·m (kg-m, in-lb)

cardiagn.com

: Apply petroleum jelly

: Apply CVT fluid

Removal and Installation

INFOID:0000000012404570

REMOVAL

1. Disconnect battery negative terminal. Refer to PG-136, "Removal and Installation".
2. Remove drain plug from oil pan and then drain the CVT fluid.
3. Remove drain plug gasket.
   CAUTION:
   Do not reuse drain plug gasket.
4. Remove the front fender side protector (LH). Refer to EXT-23, "Removal and Installation".
5. Disconnect the CVT unit harness connector.
6. Remove the snap ring (1) from the CVT unit harness connector (A).

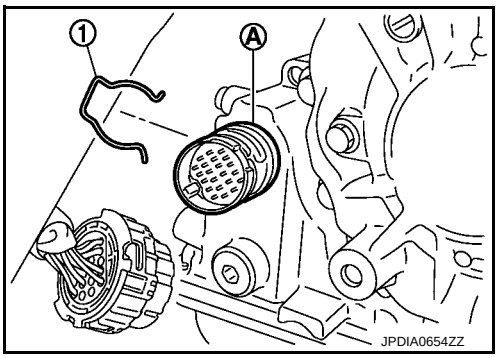

7. Press the CVT unit harness connector (A) into the transaxle case.
   CAUTION:
   Do not damage the CVT unit harness connector.
   NOTE:
   Clean around the harness connector to prevent foreign materials from entering into the transaxle case.

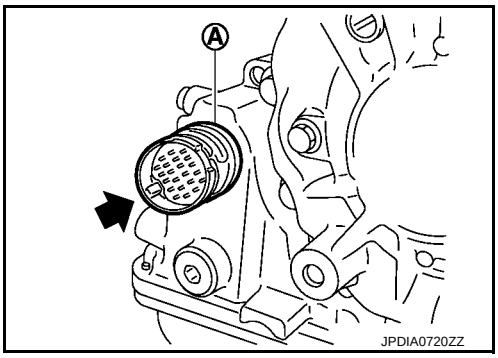

8. Remove the oil pan bolts, and then remove the oil pan and oil pan gasket.
   CAUTION:
   Do not reuse oil pan gasket.
9. Remove the magnets from the oil pan.
10. Remove the lock nut (1) and spring washer (2), and manual plate (3) from manual shaft (A).

    : Front

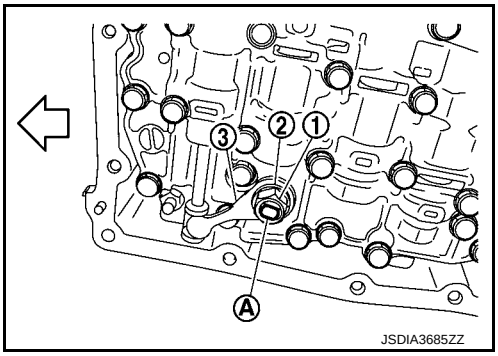

cardiagn.com

11. Remove CVT fluid temperature sensor bracket (1).

    ⬅ : Bolt

    ⇦ : Front

12. Disconnect control valve harness connector (A).

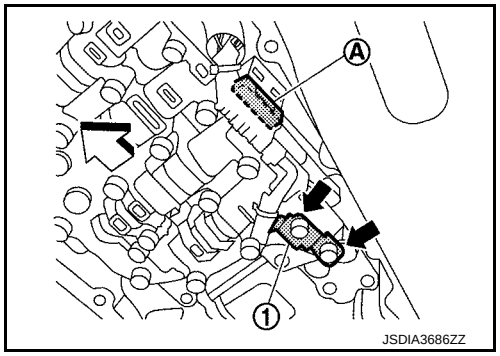

13. Remove the oil strainer assembly bolts (A) and (B), and then remove the oil strainer assembly (1).

    ⇦ : Front

14. Remove O-ring from oil strainer assembly.
    CAUTION:
    Do not reuse O-ring.

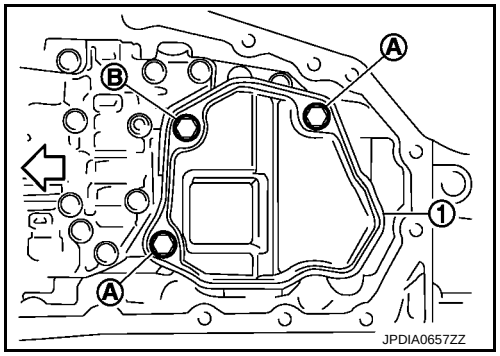

15. Remove the bracket (1).

    ⬅ : Bolt

    ⇦ : Front

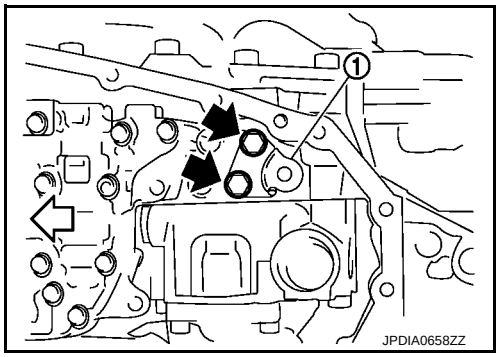

16. Remove the control valve bolts (A) and (B), and then remove the control valve from the transaxle case.

    ⇦ : Front

    CAUTION:
    Do not drop the control valve, ratio control valve and manual shaft.

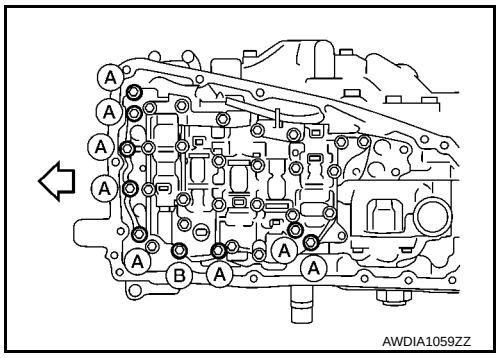

17. Remove terminal cord assembly (1) from inside the transaxle case.

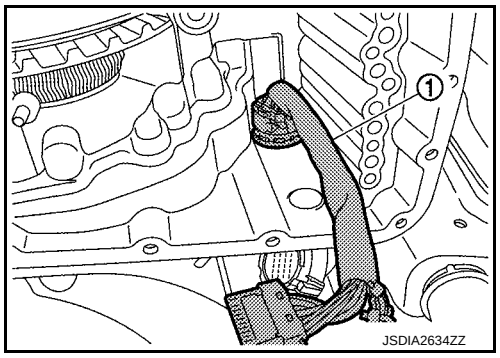

cardiagn.com

18. Remove the lip seal (1) from the transaxle case.
CAUTION:
Do not reuse lip seal.

⇦ : Front

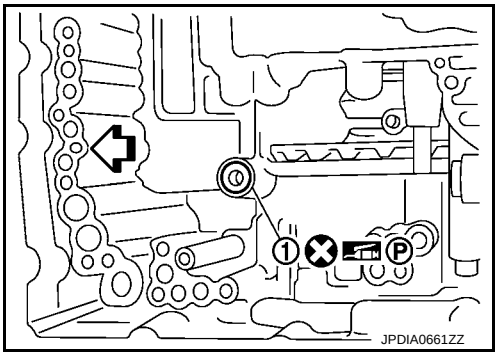

INSTALLATION

1. Install the lip seal (1) to the transaxle case.
CAUTION:
Do not reuse lip seal.

⇦ : Front

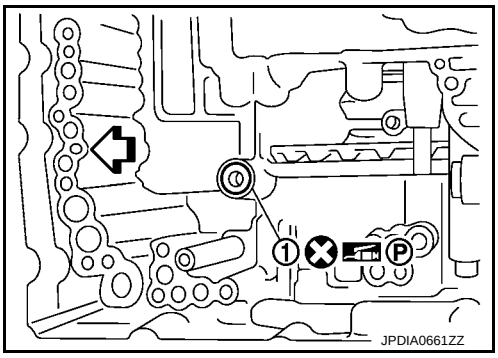

2. Install terminal cord assembly (1) to the transaxle case.
CAUTION:
Connect the CVT unit connector with the stopper facing up, and then press in until it clicks.

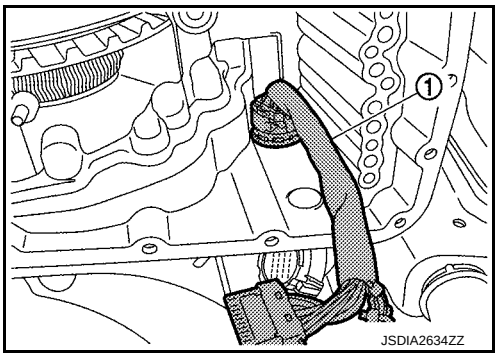

3. Install the control valve to the transaxle case.
CAUTION:
- **Do not pinch the harness between the control valve and the transaxle case.**
- **Do not drop the control valve, ratio control valve and manual shaft.**

4. Secure the control valve using the control valve bolts (A) and (B).

⇦ : Front

Bolt	Bolt length (mm)	Number of bolts
A	54	8
B	44	1

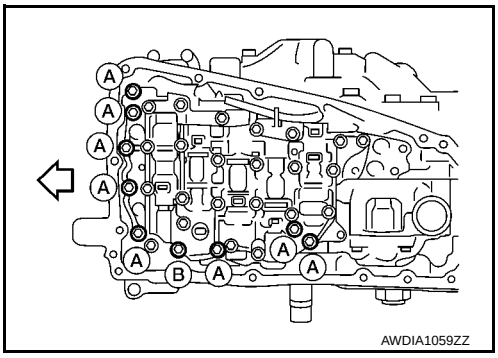

cardiagn.com

5. Connect the control valve harness connectors (A).

⇦ : Front

CAUTION:
- **Do not pinch the harness between the control valve and the transaxle case.**
- **Securely insert the harness connector until it clicks and locks.**

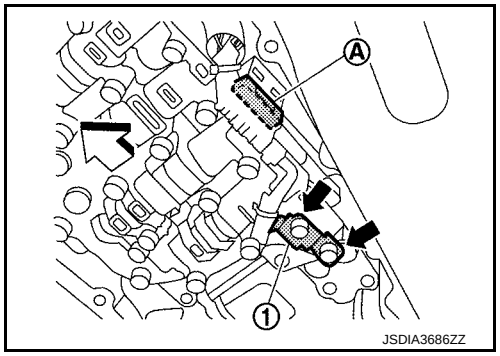

6. Install CVT fluid temperature sensor bracket (1).

⬅ : Bolt

7. Install the bracket (1).

⬅ : Bolt

⇦ : Front

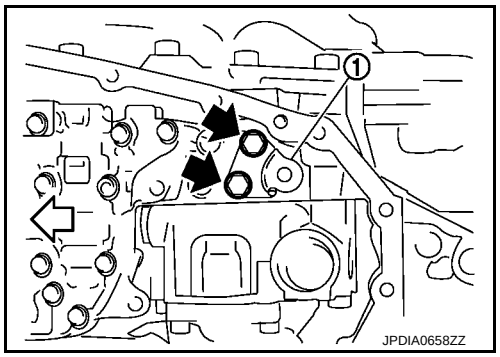

8. Install O-ring to oil strainer assembly.

CAUTION:
- **Do not reuse O-ring.**
- **Apply CVT fluid NS-3 to O-ring.**

9. Install the oil strainer assembly (1) using the oil strainer assembly bolts (A) and (B).

⇦ : Front

Bolt	Bolt length (mm)	Number of bolts
A	12	2
B	44	1

NOTE:
Remove the bracket and adjust the position again if the bolt hole positions are not aligned.

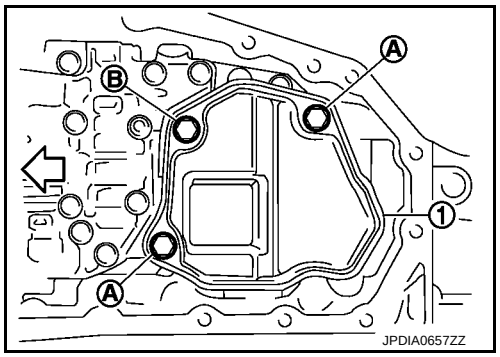

10. Install the manual plate (1) while aligning with the groove (A) of the manual valve.

CAUTION:
Assemble the manual plate while aligning its end with the cutout (⬅) of the manual valve.

(A) : Manual shaft

⇦ : Front

11. Install the spring washer (2) and the lock-nut (3), and then tighten to the specified torque.

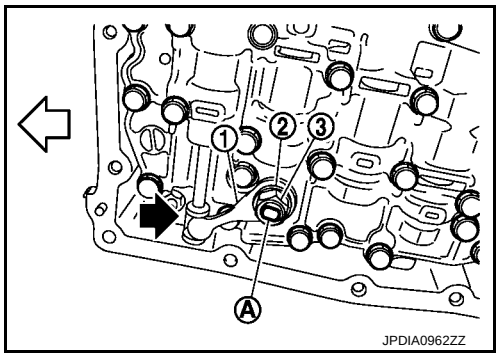

cardiagn.com

12. Install the snap ring (1) to the CVT unit harness connector (A).
13. Connect the CVT unit harness connector.
14. install fender protector side cover (LH).
15. Install the magnet while aligning it with the convex side of oil pan.
    CAUTION:
    Completely clean the iron powder from the magnet area of oil pan and the magnet.

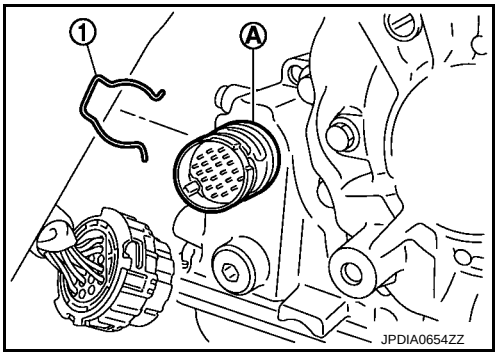

16. Install the oil pan to the transaxle case with the following procedure.
    1. Install the oil pan gasket to the oil pan.
       CAUTION:
       - **Completely wipe out any moisture, oil, and old gasket from the oil pan gasket surface and bolt hole of oil pan and transaxle case.**
       - **Do not reuse oil pan gasket.**
    2. Install the oil pan assembly to the transaxle case, and then temporarily tighten the oil pan bolt.
    3. Tighten the oil pan bolts in the order shown to the specified torque.

       ⇦ : Front

    4. Tighten the oil pan bolts again clockwise from (1) shown to the specified torque.

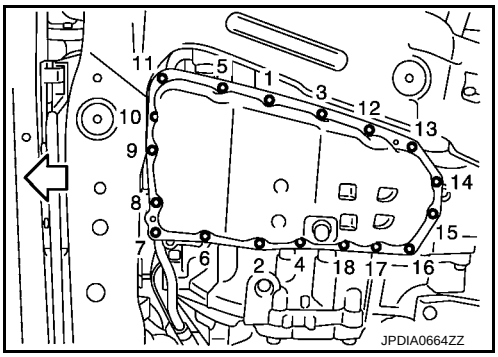

17. Install drain plug gasket to drain plug.
    CAUTION:
    Do not reuse drain plug gasket.
18. Install drain plug to oil pan.
19. Connect battery negative terminal. Refer to PG-136, "Removal and Installation".
20. Fill with CVT fluid to transaxle assembly. Refer to TM-180, "Inspection".

Inspection and Adjustment

INFOID:0000000012404571

INSPECTION AFTER REMOVAL

Check oil pan for foreign material.
- If a large amount of worn material is found, clutch plate may be worn.
- If iron powder is found, bearings, gears, or clutch plates may be worn.
- If aluminum powder is found, bushing may be worn, or chips or burrs of aluminum casting parts may enter.

Check points where wear is found in all cases.

INSPECTION AFTER INSTALLATION

Check the CVT fluid level and leakage. Refer to TM-180, "Inspection".

ADJUSTMENT AFTER INSTALLATION

Perform "ADDITIONAL SERVICE WHEN REPLACING TRANSAXLE ASSEMBLY OR CONTROL VALVE ASSEMBLY". Refer to TM-76, "Description".

cardiagn.com

G SENSOR

Exploded View

INFOID:0000000012404572

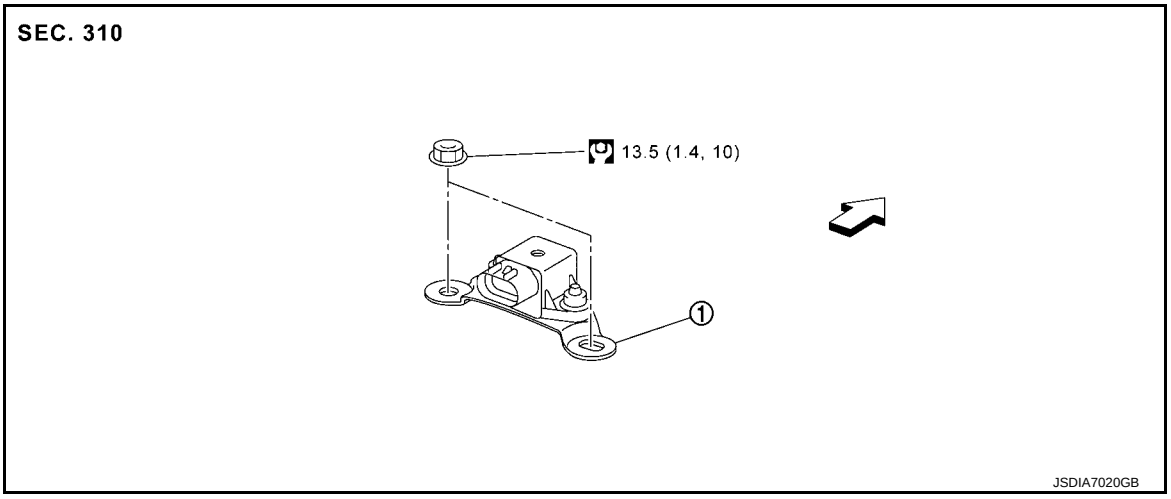

1. G sensor

⇦ : Vehicle front

: N·m (kg-m, in-lb)

Removal and Installation

INFOID:0000000012404573

CAUTION:
- **Never drop or strike G sensor, because it has little tolerance for impact.**
- **Never use a power tool to avoid impact.**

REMOVAL

1. Disconnect the battery cable from the negative terminal. Refer to PG-136, "Exploded View".
2. Remove center console. Refer to IP-28, "Removal and Installation".
3. Disconnect G sensor connector.
4. Remove G sensor.

INSTALLATION

Installation is the reverse order of removal.

Adjustment

INFOID:0000000012404574

ADJUSTMENT AFTER INSTALLATION

Perform “G SENSOR CALIBRATION”. Refer to TM-80, "Description".

cardiagn.com

INPUT SPEED SENSOR

Exploded View

INFOID:0000000012404575

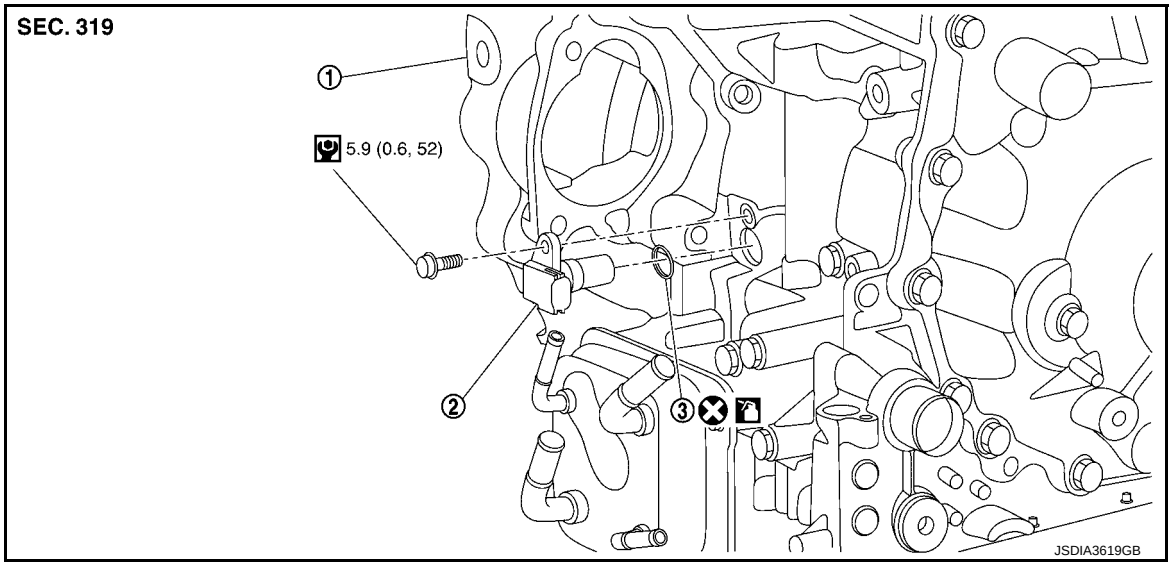

① Transaxle assembly ② Input speed sensor ③ O-ring

: Always replace after every disassembly.

: N m (kg-m, in-lb)

: Apply CVT fluid

Removal and Installation

INFOID:0000000012404576

REMOVAL

1. Remove the starter motor. Refer to STR-19, "Removal and Installation".
2. Disconnect the harness connector from the input speed sensor (1).
3. Remove the input speed sensor bolt, then the input speed sensor (1).
4. Remove the O-ring (2) from the input speed sensor (1).
   CAUTION:
   Do not reuse O-ring.

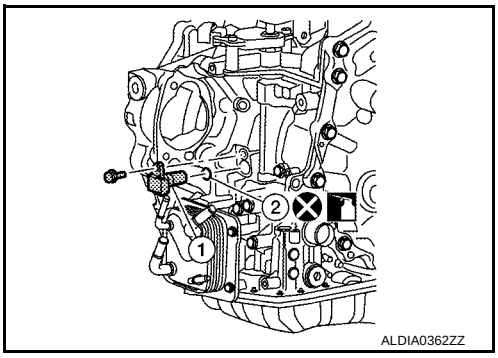

INSTALLATION

Installation is in the reverse order of removal.

CAUTION:

- **Do not reuse O-ring.**
- **Apply Genuine NISSAN CVT Fluid NS-3 to the O-ring.**
- **Perform "ADDITIONAL SERVICE WHEN REPLACING ECM". Refer to EC-513, "Removal and Installation"**

Inspection and Adjustment

INFOID:0000000012404577

INSPECTION AFTER INSTALLATION

Check for CVT fluid leakage. Refer to TM-180, "Inspection".

cardiagn.com

ADJUSTMENT AFTER INSTALLATION

Adjust the CVT fluid level. Refer to TM-182, "Adjustment".

cardiagn.com

PRIMARY SPEED SENSOR

Exploded View

INFOID:0000000012404578

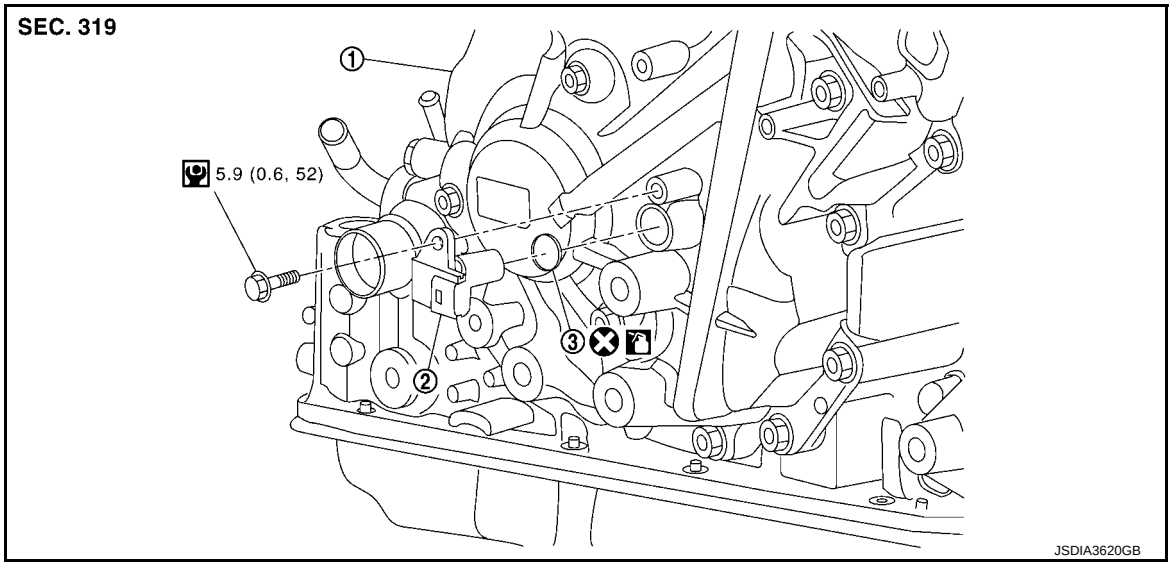

① Transaxle assembly ② Primary speed sensor ③ O-ring

: Always replace after every disassembly.

: N m (kg-m, in-lb)

: Apply CVT Fluid

Removal and Installation

INFOID:0000000012404579

REMOVAL

1. Remove the fender protector side cover (LH). Refer to EXT-23, "Removal and Installation".
2. Disconnect the harness connector from primary speed sensor (1).
3. Remove the primary speed sensor bolt, then the primary speed sensor (1).
4. Remove the O-ring (2) from the primary speed sensor (1).
   CAUTION:
   Do not reuse O-ring.

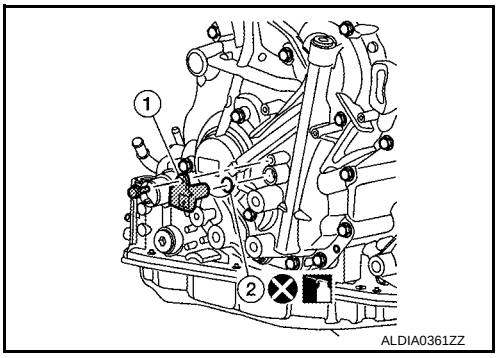

INSTALLATION

Installation is in the reverse order of removal.

CAUTION:

- **Do not reuse O-ring.**
- **Apply Genuine NISSAN CVT Fluid NS-3 to the O-ring.**

Inspection and Adjustment

INFOID:0000000012404580

INSPECTION AFTER INSTALLATION

Check for CVT fluid leakage. Refer to TM-180, "Inspection".

ADJUSTMENT AFTER INSTALLATION

Adjust the CVT fluid level. Refer to TM-182, "Adjustment".

cardiagn.com

OUTPUT SPEED SENSOR

Exploded View

INFOID:0000000012404581

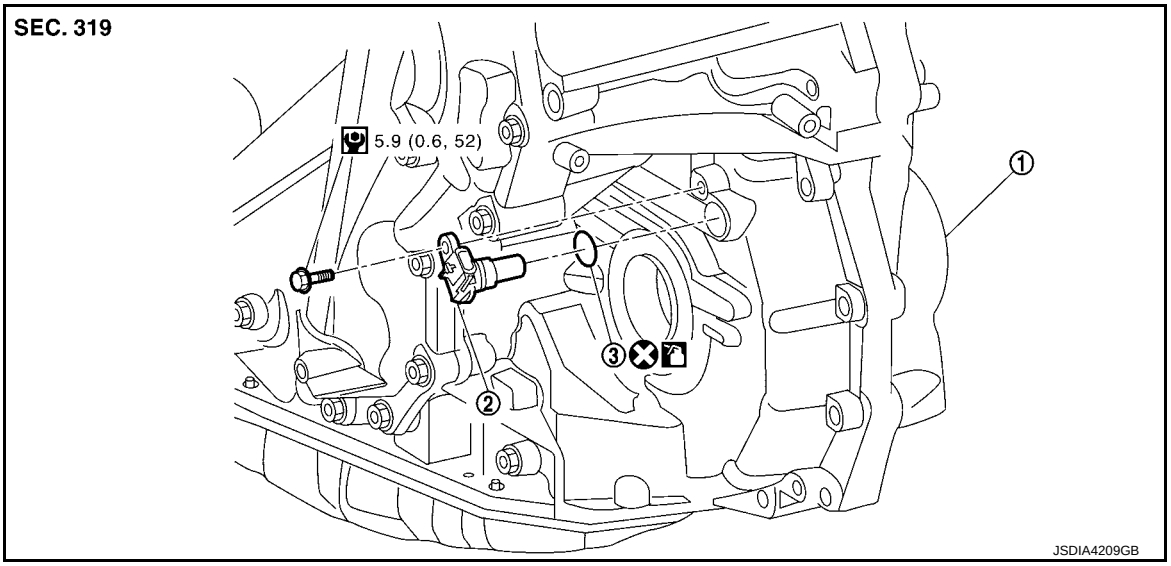

① Transaxle assembly ② Output speed sensor ③ O-ring

: Always replace after every disassembly.

: N·m (kg-m, in-lb)

: Apply CVT Fluid

Removal and Installation

INFOID:0000000012404582

REMOVAL

1. Disconnect the harness connector from output speed sensor (1).
2. Remove the output speed sensor bolt, then the output speed sensor (1).
3. Remove the O-ring (2) from the output speed sensor (1).
   CAUTION:
   Do not reuse O-ring.

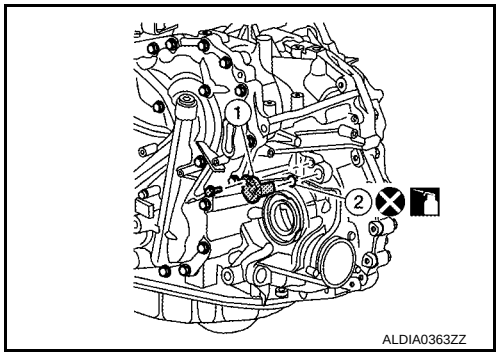

INSTALLATION

Installation is in the reverse order of removal.

CAUTION:

- **Do not reuse O-ring.**
- **Apply Genuine NISSAN CVT Fluid NS-3 to the O-ring.**

Inspection and Adjustment

INFOID:0000000012404583

INSPECTION AFTER INSTALLATION

Check for CVT fluid leakage. Refer to TM-180, "Inspection".

ADJUSTMENT AFTER INSTALLATION

Adjust the CVT fluid level. Refer to TM-182, "Adjustment".

cardiagn.com

AIR BREATHER HOSE

Exploded View

INFOID:0000000012404584

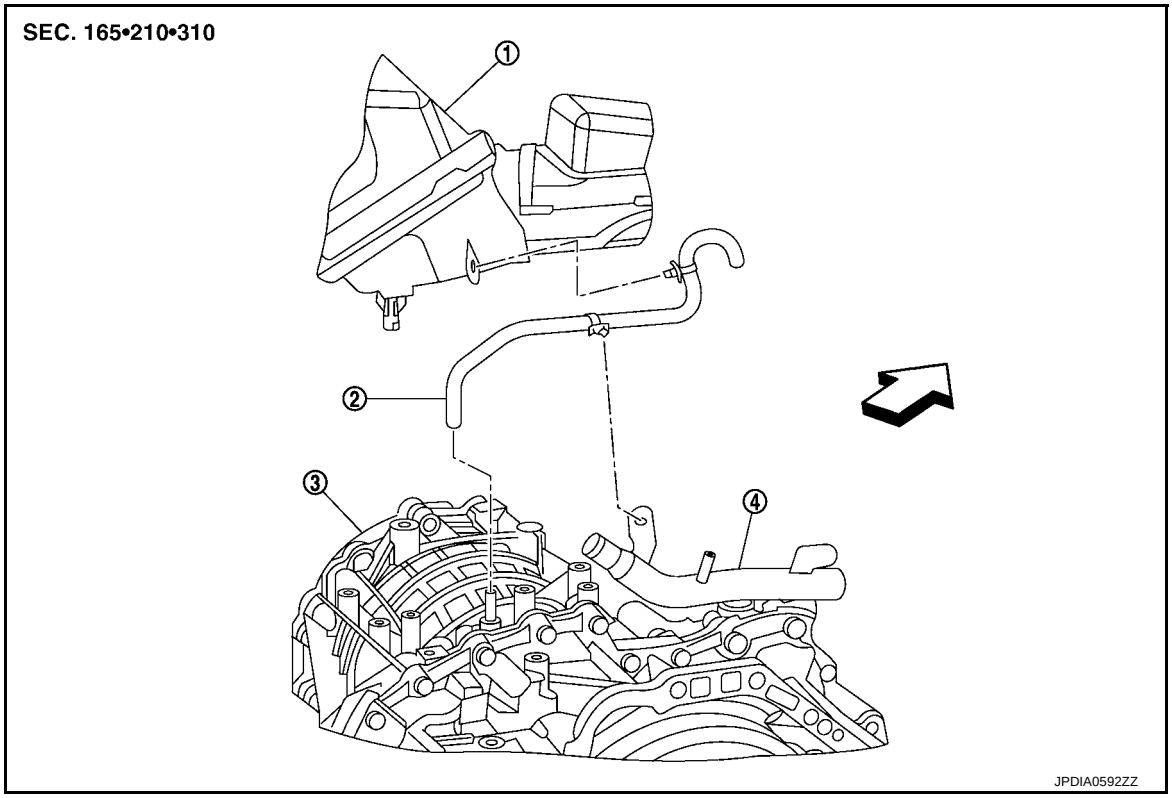

① Air cleaner case
② Air breather hose
③ Transaxle assembly
④ Heater pipe
⇦ : Vehicle front

Removal and Installation

INFOID:0000000012404585

REMOVAL

1. Disconnect the battery cable from the negative terminal. Refer to PG-136, "Removal and Installation".
2. Remove air duct (inlet). Refer to EM-27, "Removal and Installation".
3. Remove clip from air cleaner case.
4. Remove air cleaner case and air duct assembly. Refer to EM-27, "Removal and Installation".
5. Remove clip from heater pipe.
6. Remove air breather hose from transaxle assembly.

INSTALLATION

Note the following, and install in the reverse order of removal.

CAUTION:

cardiagn.com

- **Insert air breather hose (2) to the bend (A) of air breather tube (1).**
- **Install air breather hose to air breather tube so that the paint mark is facing forward.**
- **Check that air breather hose is not collapsed or blocked due to folding or bending when installed.**

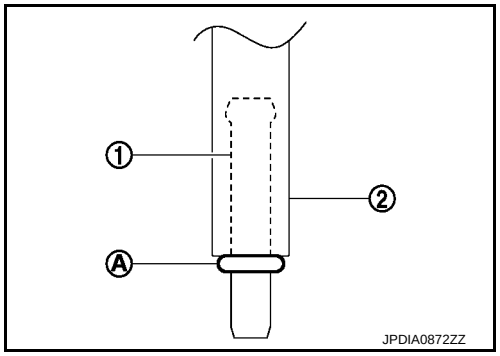

cardiagn.com

DIFFERENTIAL SIDE OIL SEAL

Exploded View

INFOID:0000000012404586

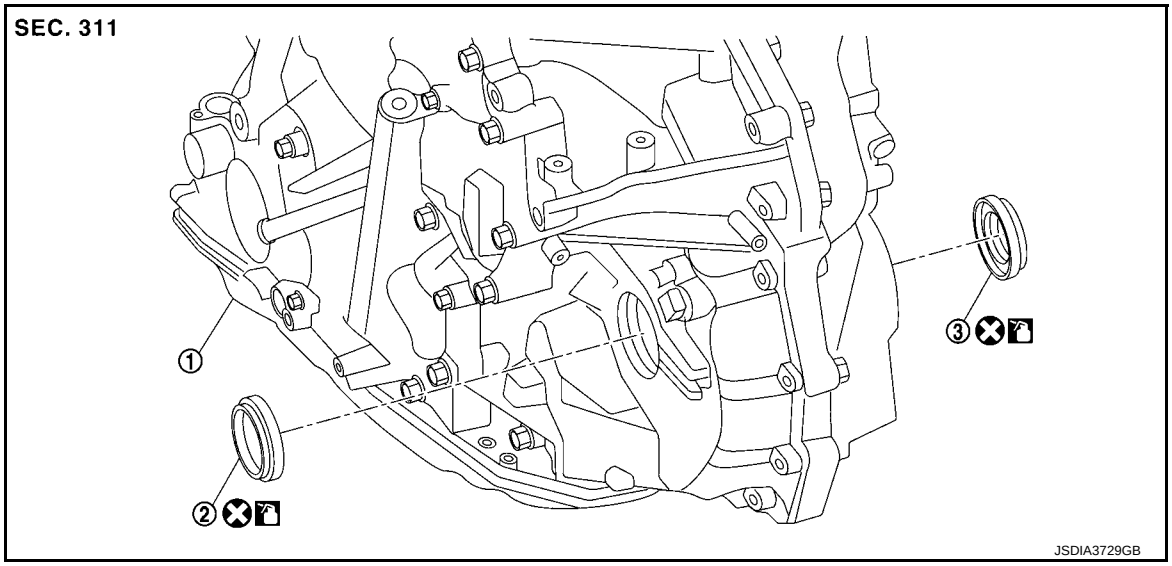

① Transaxle assembly ② Differential side oil seal (left side) ③ Differential side oil seal (right side)

: Always replace after every disassembly.

: Apply CVT Fluid

Removal and Installation

INFOID:0000000012404587

REMOVAL

NOTE:

When removing components such as hoses, tubes/lines, etc., cap or plug openings to prevent fluid from spilling.

1. Disconnect the battery cable from the negative terminal. Refer to PG-136, "Removal and Installation".
2. Remove exhaust front tube. Refer to EX-6, "Removal and Installation".
3. Remove front drive shaft. Refer to FAX-18, "LEFT SIDE : Removal and Installation" (LH) or FAX-19, "RIGHT SIDE : Removal and Installation" (RH).
4. Remove differential oil side seal (1) using suitable tool (A).
   CAUTION:
   Be careful not to scratch transaxle case and converter housing.

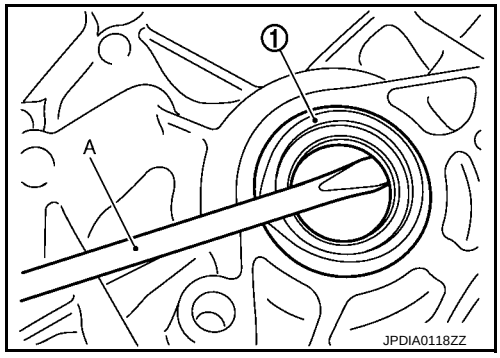

INSTALLATION

Installation is in the reverse order of removal.

CAUTION:

- **Do not reuse differential side oil seal.**
- **Apply Genuine NISSAN CVT Fluid NS-3 to differential side oil seals.**
- **When inserting the drive shaft, be sure to use Tool.**

Tool number : KV38107900

cardiagn.com

Install each differential side oil seal evenly using Tool so that differential side oil seal protrudes by the dimension (C) and (D) respectfully.

(A) : Differential side oil seal (LH)
(B) : Differential side oil seal (RH)

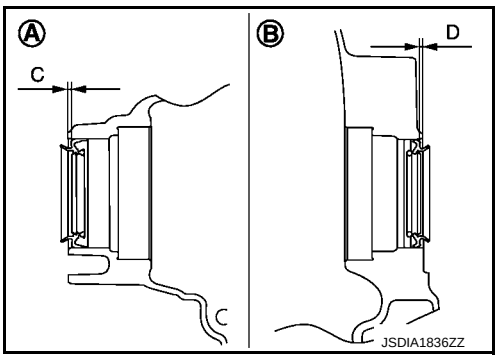

Dimension (C) :Height difference from case end surface is within 0 ± 0.5 mm (0.0 ± 0.020 in).

Dimension (D) :Height difference from case end surface is within 0 ± 0.5 mm (0.0 ± 0.020 in).

NOTE:

The reference is the installation direction of the differential side oil seal.

Drift to be used:

Location	Commercial Service Tools
Transaxle case side	Commercial service tool with outer dia. 56 mm (2.20 in) and inner dia. 50 mm (1.97 in)
Converter housing side	

Inspection and Adjustment

INFOID:0000000012404588

INSPECTION AFTER INSTALLATION

Check for CVT fluid leakage. Refer to TM-180, "Inspection".

ADJUSTMENT AFTER INSTALLATION

Adjust the CVT fluid level. Refer to TM-182, "Adjustment".

cardiagn.com

CVT OIL WARMER SYSTEM

WATER HOSE

WATER HOSE : Exploded View

INFOID:0000000012404589

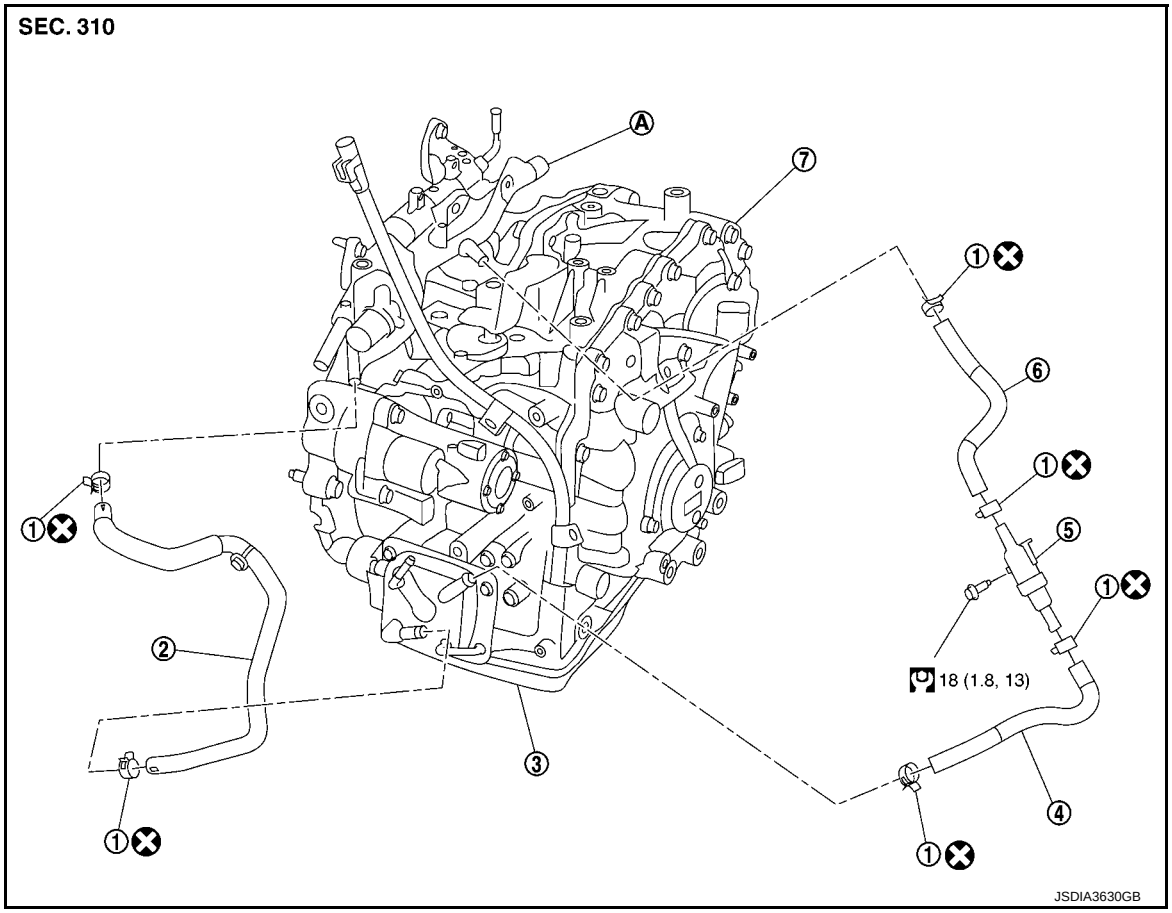

1	Hose clamp	2	CVT water hose A	3	CVT oil warmer
4	CVT water hose B	5	Heater thermostat	6	CVT water hose C
7	Transaxle assembly				
A	Water outlet				

: Always replace after every disassembly.

: N·m (kg-m, ft-lb)

WATER HOSE : Removal and Installation

INFOID:0000000012404590

REMOVAL

WARNING:

Do not remove the radiator cap when the engine is hot. Serious burns could occur from high pressure coolant escaping from the radiator. Wrap a thick cloth around the cap. Slowly turn it a quarter turn to allow built-up pressure to escape. Carefully remove the cap by turning it all the way.

CAUTION:

Perform when the engine is cold.

NOTE:

When removing components such as hoses, tubes/lines, etc., cap or plug openings to prevent fluid from spilling.

1. Remove engine room cover. Refer to EM-25, "Removal and Installation".

cardiagn.com

2. Remove front air duct and air cleaner case assembly. Refer to EM-27, "Removal and Installation".
3. Release clip (A) and release hose clamps and remove CVT water hose A from water outlet.
   CAUTION:
   Do not reuse hose clamps.

   ⇦ : Front

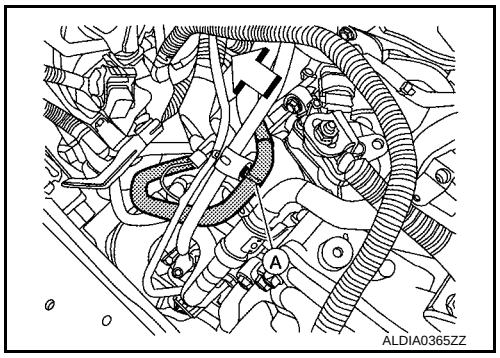

4. Remove CVT heater thermostat bolt, release hose clamps then remove CVT heater thermostat and CVT water hose C from water outlet.
   CAUTION:
   Do not reuse hose clamps.
5. Remove CVT water hose inlet and CVT water hose outlet from CVT oil warmer.

INSTALLATION

Note the following, and install in the reverse order of removal.

CAUTION:
Do not reuse hose clamps.

- Insert CVT water hose according to dimension (A) described below.

CVT water hose (1)	Insert side tube (2)	Dimension (A)
CVT water hose A	Water outlet	End reaches the spool portion (B)
	CVT oil warmer	
CVT water hose B	CVT oil warmer	
	Heater thermostat	
CVT water hose C	Heater thermostat	
	Water outlet	

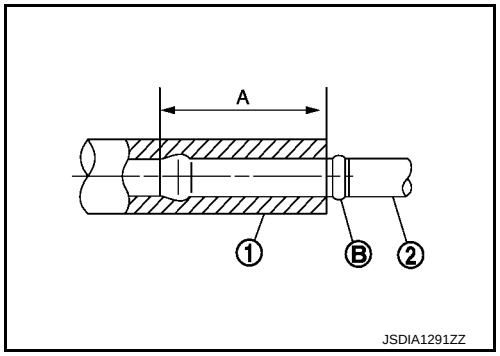

- Install hose clamps (1) at the both ends of CVT water hose (2) with dimension (A) from the hose end.

  Dimension (A) : 5 – 7 mm (0.20 – 0.28 in)

- Hose clamp should not interfere with the bulge.

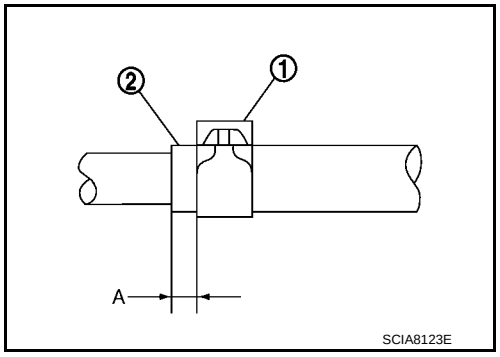

CVT water hose	Hose end	Paint mark	Position of hose clamp
CVT water hose A	Water outlet side	Facing to the front of the vehicle	A
	CVT oil warmer side	Facing to the front of the vehicle	C
CVT water hose B	CVT oil warmer side	Facing to the front of the vehicle	B
	Heater thermostat side	N/A	A
CVT water hose C	Heater thermostat side	N/A	A
	Water outlet side	Facing upward	C

*: Refer to the illustrations for the specific position of each hose clamp tab.

cardiagn.com

- The illustrations indicate the view from the hose ends.
- When installing hose clamps the center line of each clamp tab should be positioned as shown.

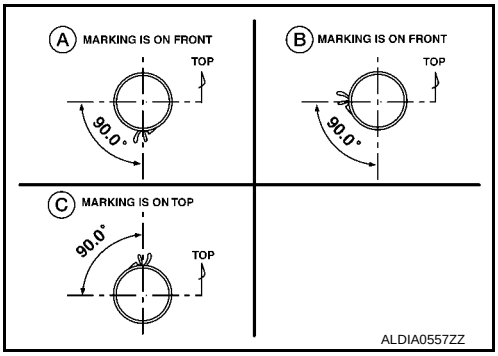

WATER HOSE : Inspection

INFOID:0000000012404591

INSPECTION AFTER INSTALLATION

Start and warm up the engine. Visually check that there is no leakage of engine coolant and CVT fluid.

CVT FLUID COOLER HOSE

CVT FLUID COOLER HOSE : Exploded View

INFOID:0000000012404592

COMPONENT PARTS LOCATION

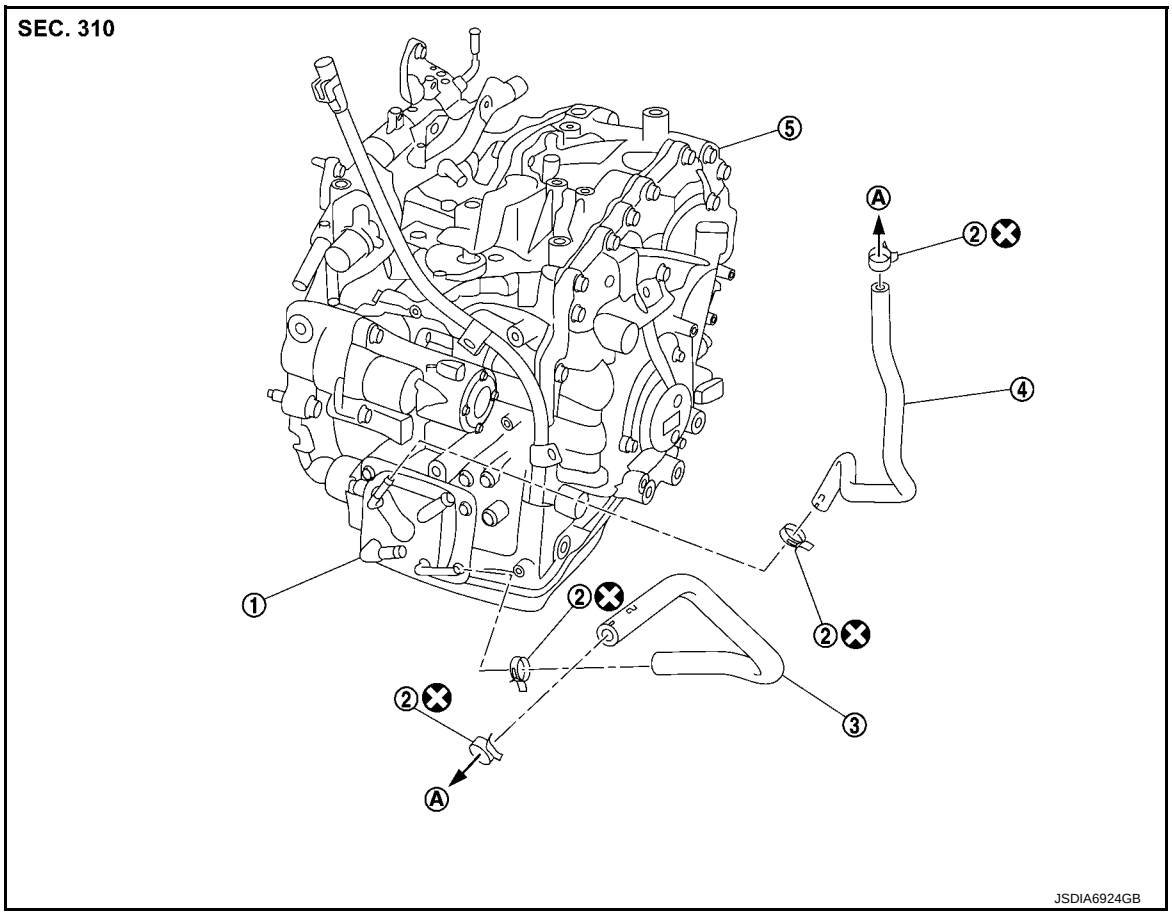

① CVT oil warmer
② Hose clamp
③ CVT fluid cooler hose A
④ CVT fluid cooler hose B
⑤ Transaxle assembly
Ⓐ : To radiator
⊗ : Always replace after every disassembly.

cardiagn.com

CVT FLUID COOLER HOSE : Removal and Installation

INFOID:0000000012404593

REMOVAL

NOTE:
When removing components such as hoses, tubes/lines, etc., cap or plug openings to prevent fluid from spilling.

1. Remove engine room cover. Refer to EM-25, "Removal and Installation".
2. Remove the front air duct and air cleaner case assembly. Refer to EM-27, "Removal and Installation".
3. Release hose clamp, then remove CVT fluid cooler hose A and B from CVT oil warmer and radiator.
   CAUTION:
   Do not reuse hose clamps.

INSTALLATION

Installation is in the reverse order of removal.
CAUTION:
Do not reuse hose clamps.

- Insert CVT fluid cooler hoses according to dimension (A).

CVT fluid cooler hose (1)	Insert side tube (2)	Dimension (A)
CVT fluid cooler hose A	Radiator tube	End reaches the 2-stage bulge (B)
	CVT oil warmer	
CVT fluid cooler hose B	CVT oil warmer	
	Radiator tube	

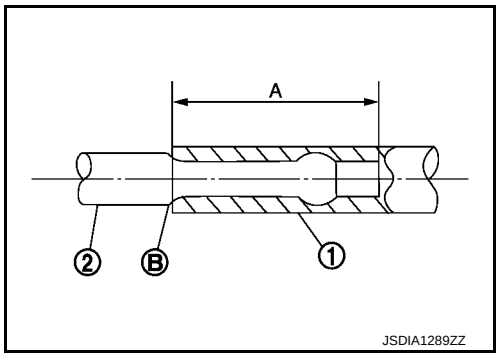

- Install hose clamps (1) at both ends of CVT fluid cooler hoses (2) with dimension (A) from the hose end.

  Dimension (A) : 5 – 7 mm (0.20 – 0.28 in)

- Hose clamp should not interfere with the bulge.

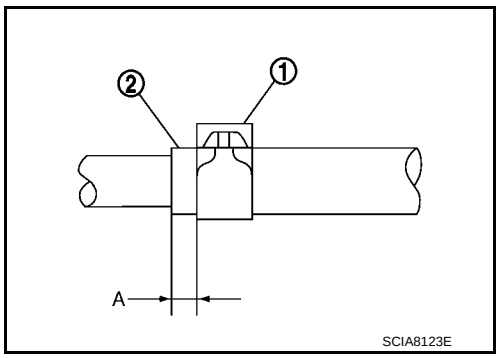

CVT fluid cooler hose	Hose end	Paint mark	Position of hose clamp
CVT fluid cooler hose A	Radiator tube side	Facing upward	B
	CVT oil warmer side	Facing to the right of the vehicle	B
CVT fluid cooler hose B	CVT oil warmer side	Facing downward	A
	Radiator tube side	Facing to the front of the vehicle	B

*: Refer to the illustrations for the specific position of each hose clamp tab.

cardiagn.com

- The illustrations indicate the view from the hose ends.
- When installing hose clamps the center line of each clamp tab should be positioned as shown.

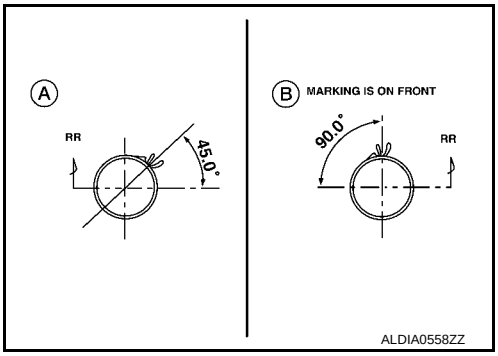

CVT FLUID COOLER HOSE : Inspection

INFOID:0000000012404594

INSPECTION AFTER INSTALLATION

Check for CVT fluid leakage and check CVT fluid level. Refer to TM-180, "Inspection".

CVT OIL WARMER

CVT OIL WARMER : Exploded View

INFOID:0000000012404595

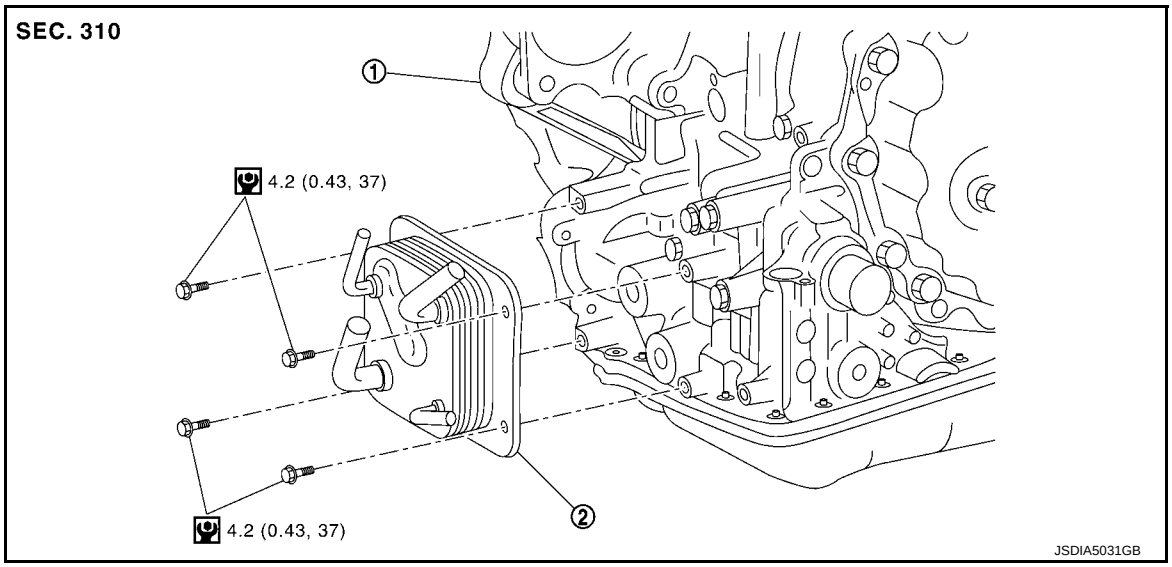

① Transaxle assembly ② CVT oil warmer

: N·m (kg-m, ft-lb)

CVT OIL WARMER : Removal and Installation

INFOID:0000000012404596

REMOVAL

WARNING:

Do not remove the radiator cap when the engine is hot. Serious burns could occur from high pressure coolant escaping from the radiator. Wrap a thick cloth around the cap. Slowly turn it a quarter turn to allow built-up pressure to escape. Carefully remove the cap by turning it all the way.

CAUTION:

Perform when the engine is cold.

1. Remove CVT water hose inlet and CVT water hose outlet from CVT oil warmer. Refer to TM-208, "WATER HOSE : Exploded View".
2. Remove CVT fluid cooler hose inlet and CVT fluid cooler hose outlet from CVT oil warmer. Refer to TM-210, "CVT FLUID COOLER HOSE : Exploded View".
3. Remove CVT oil warmer bolts, then remove CVT oil warmer from vehicle.

cardiagn.com

INSTALLATION

Installation is in the reverse order of removal.

CVT OIL WARMER : Inspection

INFOID:0000000012404597

INSPECTION AFTER INSTALLATION

- Check for CVT fluid leakage and check CVT fluid level. Refer to TM-180, "Inspection".
- Start and warm up the engine. Visually check that there is no leakage of engine coolant and CVT fluid.

cardiagn.com

PLUG

Description

INFOID:0000000012404598

Replace the O-ring if oil leakage or exudes from the plug.

Exploded View

INFOID:0000000012404599

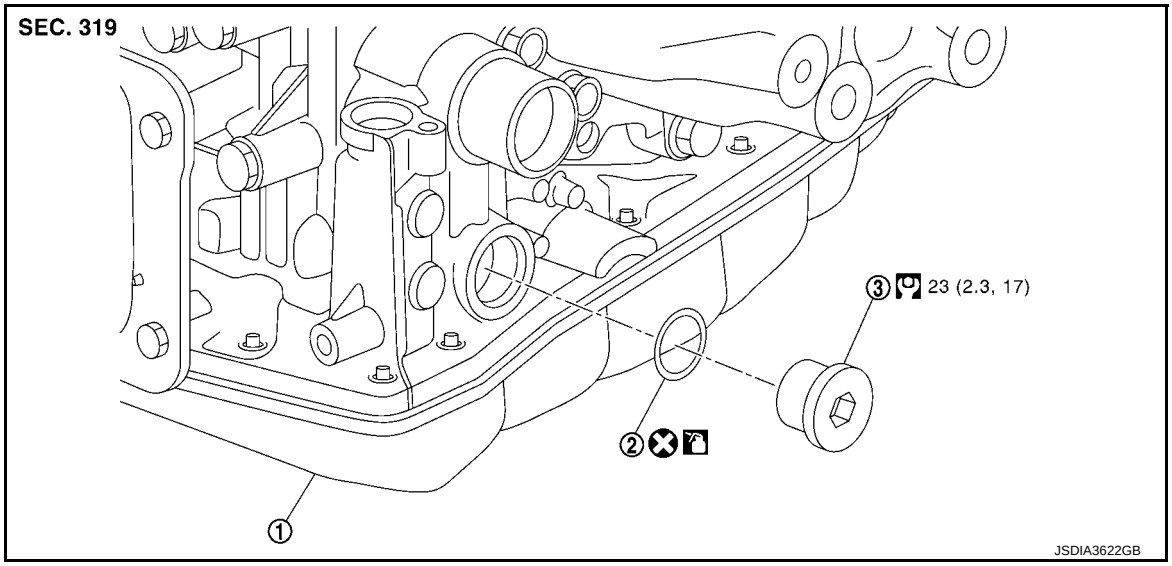

① Transaxle assembly ② O-ring ③ Plug

: Always replace after every disassembly.

: N·m (kg-m, ft-lb)

: Apply CVT Fluid

Removal and Installation

INFOID:0000000012404600

REMOVAL

1. Remove fender protector side cover (LH). Refer to EXT-23, "Removal and Installation".
2. Remove the plug and O-ring.

INSTALLATION

Installation is in the reverse order of removal.

CAUTION:

- **Do not reuse O-ring.**
- **Apply Genuine NISSAN CVT Fluid NS-3 to O-ring.**

Inspection and Adjustment

INFOID:0000000012404601

INSPECTION AFTER INSTALLATION

Check for CVT fluid leakage. Refer to TM-180, "Inspection".

ADJUSTMENT AFTER INSTALLATION

Adjust the CVT fluid level. Refer to TM-182, "Adjustment".

cardiagn.com

UNIT REMOVAL AND INSTALLATION

TRANSAXLE ASSEMBLY

Exploded View

INFOID:0000000012404602

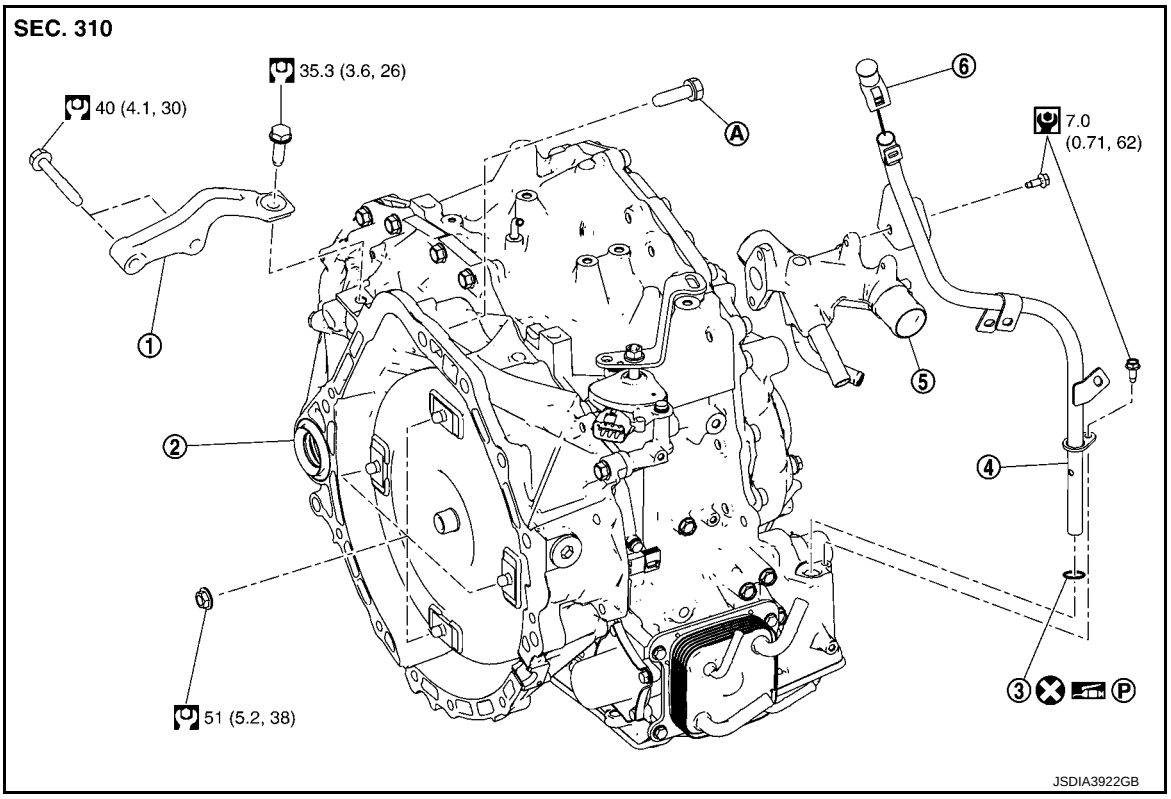

①	Gusset	②	Transaxle assembly	③	O-ring
④	CVT fluid charging pipe	⑤	Water outlet	⑥	CVT fluid charging pipe cap

Ⓐ : For the tightening torque, refer to TM-215, "Removal and Installation".

⊗ : Always replace after every disassembly.

: N·m (kg-m, ft-lb)

: N·m (kg-m, in-lb)

Ⓟ : Apply petroleum jelly

Removal and Installation

INFOID:0000000012404603

REMOVAL

WARNING:

Never remove the reservoir tank cap when the engine is hot. Serious burns could occur from high-pressure engine coolant escaping from the reservoir tank.

CAUTION:

- **Perform when the engine is cold.**
- **When replacing TCM and transaxle assembly, perform "ADDITIONAL SERVICE WHEN REPLACING TRANSAXLE ASSEMBLY". Refer to TM-76, "Work Procedure".**
- **When replacing TCM and transaxle assembly simultaneously, peform "ADDITIONAL SERVICE WHEN REPLACING TCM AND TRANSAXLE ASSEMBLY" before to TM-78, "Work Procedure".**

NOTE:

When replacing TCM and transaxle assembly as a set, replace transaxle assembly first and then replace TCM. Refer to TM-74, "Description".

cardiagn.com

1. Remove the engine assembly, the transaxle assembly, and front suspension member as a set. Refer to EM-58, "Removal and Installation".
2. Disconnect the transaxle harness connectors.
3. Remove crankshaft position sensor (POS). Refer to EM-39, "Removal and Installation".
4. Remove air breather hose. Refer to TM-204, "Removal and Installation".
5. Remove CVT fluid charging pipe.
6. Remove O-ring from CVT fluid charging pipe.
7. Remove rear plate cover. Refer to EM-39, "Removal and Installation".
8. Turn crankshaft, and remove the tightening nuts for drive plate and torque converter.
   CAUTION:
   When turning crankshaft, turn it clockwise as viewed from the front of the engine.
9. Remove transaxle assembly fixing bolts with power tool.
10. Remove transmission bracket.
11. Remove transaxle assembly from engine assembly with a hoist.
    CAUTION:
    Secure torque converter to prevent it from dropping.
12. Remove CVT oil warmer. Refer to TM-212, "CVT OIL WARMER : Removal and Installation".

INSTALLATION

Note the following, and install in the reverse order of removal.
Installation is in the reverse order of removal.
NOTE:
Write down the serial number of the new transaxle assembly.

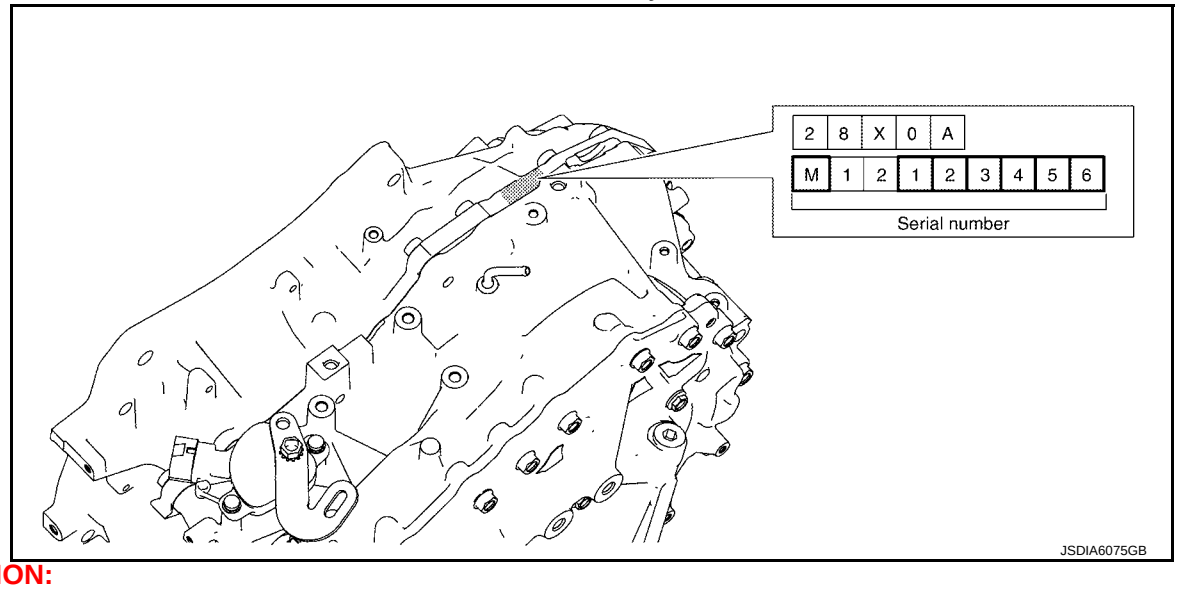

CAUTION:
- **When replacing an engine or transaxle you must make sure any dowels are installed correctly during re-assembly**
- **Improper alignment caused by missing dowels may cause vibration, oil leaks or breakage of drive train components.**
- **Never reuse O-ring.**
- **Apply petroleum jelly to O-ring.**

cardiagn.com

- Check fitting of dowel pins (⬅) when installing transaxle assembly to engine assembly.

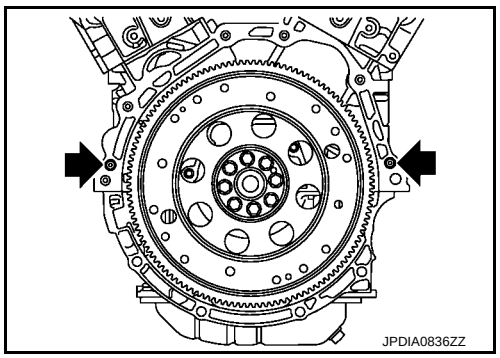

- Follow the procedure below and install transaxle to engine.

1. Rotate torque converter to align a torque converter stud bolt with the service hole.
2. Rotate drive plate to align a torque converter stud bolt insertion hole of drive plate with service hole.
3. Install transaxle to engine.
   CAUTION:
   Be careful not to strike the drive plate when inserting torque converter stud bolts to drive plate holes.
4. Tighten the fixing bolts in accordance with the following.

Bolt No.	1	2	3	4	5
Number of bolts	1	2	1	1	4
Bolt length "ℓ" mm (in)	55 (2.17)	39 (1.54)	35 (1.38)	50 (1.97)	45 (1.77)
Tightening torque N·m (kg-m, ft-lb)	74.5 (7.6, 55)				50.0 (5.1, 37)

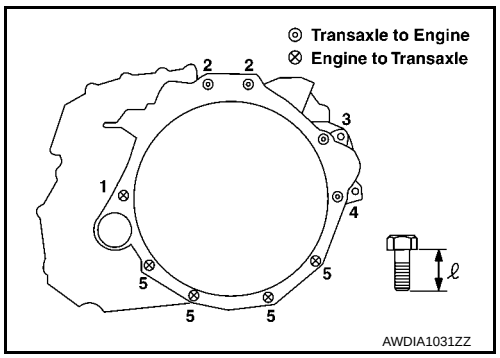

5. After tighten the torque converter nuts temporarily, tighten the torque converter nuts to the specified torque.
   CAUTION:
   - **When turning crankshaft, turn it clockwise as viewed from the crankshaft pulley side.**
   - **When tightening the torque converter nuts after fixing the crankshaft pulley bolts, confirm the tightening torque of the crankshaft pulley mounting bolts. Refer to EM-68, "Exploded View".**
   - **After converter is installed to drive plate, rotate crankshaft several turns to check that CVT rotates freely without binding.**
   - **When installing the CVT to the engine, align the matching mark on the drive plate with the matching mark on the torque converter.**
   - **When installing CVT assembly to the engine assembly, attach the bolts in accordance with the following standard.**

Inspection and Adjustment

INFOID:0000000012404604

INSPECTION BEFORE INSTALLATION

After inserting a torque converter to transaxle assembly, check that dimension (A) is within the reference value limit.

B : Scale
C : Straightedge

Dimension A : Refer to TM-222, "Torque Converter".

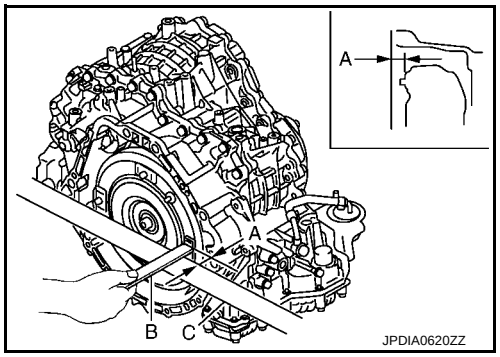

cardiagn.com

INSPECTION AFTER INSTALLATION

Check the following.

- Check for CVT fluid leakage and check CVT fluid level. Refer to TM-180, "Inspection".
- Check CVT position. Refer to TM-83, "Inspection and Adjustment".
- Start and warm up the engine. Visually check that there is no leakage of engine coolant and CVT fluid.

ADJUSTMENT AFTER INSTALLATION

- Adjust the CVT fluid level. Refer to TM-182, "Adjustment".
- Perform “ADDITIONAL SERVICE WHEN REPLACE TRANSAXLE ASSEMBLY”. Refer to TM-76, "Work Procedure".

cardiagn.com

UNIT DISASSEMBLY AND ASSEMBLY

TORQUE CONVERTER AND CONVERTER HOUSING OIL SEAL

Exploded View

INFOID:0000000012404605

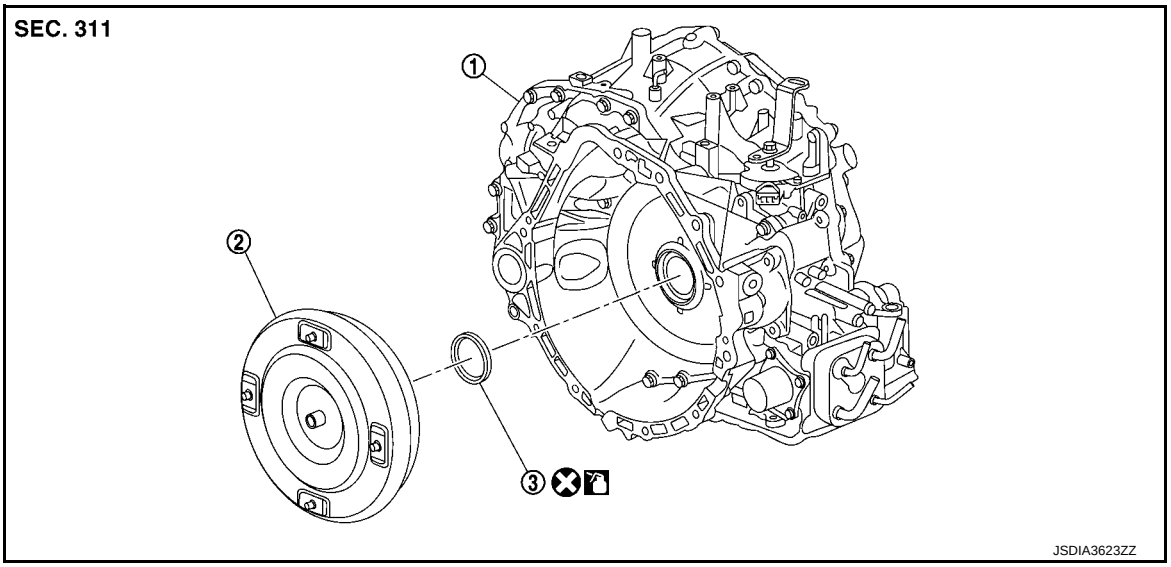

1. Transaxle assembly
2. Torque converter
3. Converter housing oil seal

⊗ : Always replace after every disassembly.

: Apply CVT Fluid

Disassembly

INFOID:0000000012404606

1. Remove transaxle assembly. Refer to TM-215, "Removal and Installation".
2. Remove torque converter from transaxle assembly.
   CAUTION:
   Do not damage the bushing on the inside of torque converter sleeve when removing torque converter.
3. Remove converter housing oil seal using suitable tool.
   CAUTION:
   Be careful not to scratch converter housing.

Assembly

INFOID:0000000012404607

Assembly is in the reverse order of disassembly.

CAUTION:

Do not reuse converter housing oil seal.

NOTE:

Lubricate converter housing oil seal prior to installation.

cardiagn.com

- Drive converter housing oil seal ① evenly using a drift (A) (commercial service tool) so that converter housing oil seal protrudes by the dimension (B) respectively.

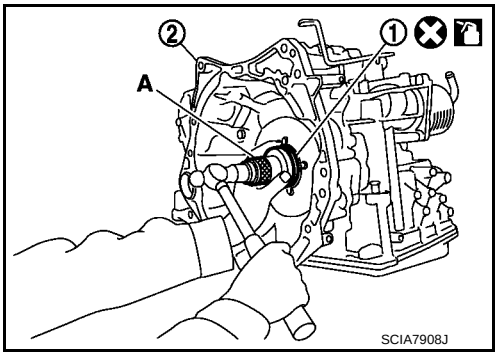

Unit: mm (in)

Commercial service tool: (A)	Outer diameter: 65 (2.56)
	Inner diameter: 60 (2.36)

② : Transaxle assembly

Unit: mm (in)

Dimension (B)	1.0 ± 0.5 (0.039 ± 0.020)

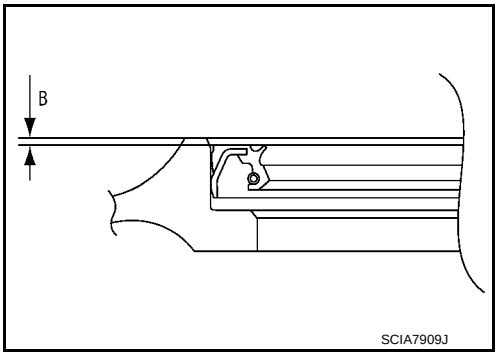

NOTE:
Converter housing oil seal pulling direction is used as the reference.

- Attach the pawl Ⓐ of the torque converter to the drive sprocket hole Ⓑ on the transaxle assembly side.

CAUTION:
- **Rotate the torque converter for installing torque converter.**
- **Do not damage the bushing inside the torque converter sleeve when installing the converter housing oil seal.**

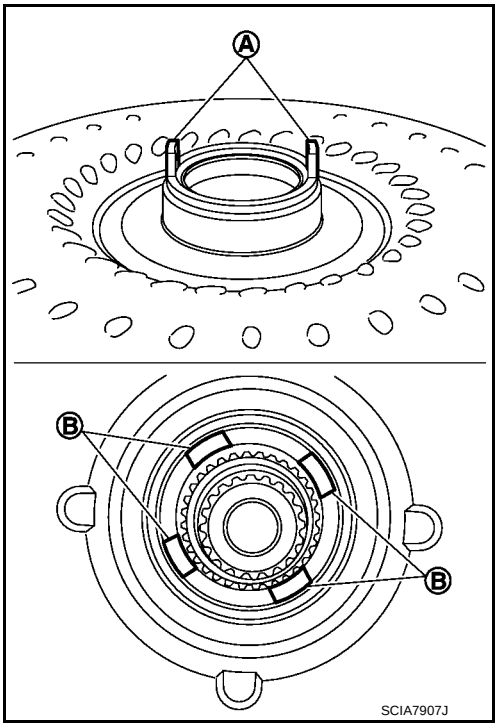

Inspection

INFOID:0000000012404608

INSPECTION AFTER INSTALLATION

cardiagn.com

- After inserting a torque converter to the CVT, check dimension (A) with in the reference value limit.

B : Scale
C : Straightedge

Dimension (A) : Refer to TM-222, "Torque Converter".

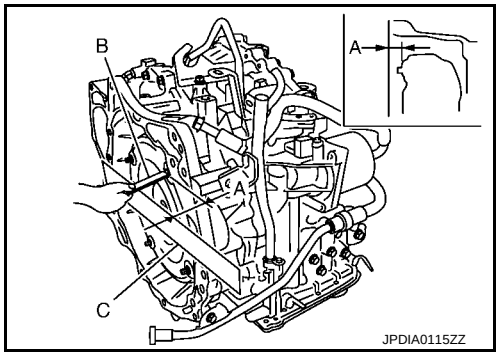

cardiagn.com

SERVICE DATA AND SPECIFICATIONS (SDS)

SERVICE DATA AND SPECIFICATIONS (SDS)

General Specification

INFOID:0000000012404609

Applied model	Engine	VQ35DE
	Axle	2WD
Transaxle model		RE0F10J
Transaxle gear ratio	D position	2.436 – 0.384
	R position	1.815
	Final drive	4.602
Recommended fluid		Refer to MA-10, "Fluids and Lubricants".
Fluid capacity liter (US qt, Imp qt)		

Shift Characteristics

INFOID:0000000012404610

Unit: rpm

Throttle position	Shift pattern	CVT input speed	
		At 40 km/h (25 MPH)	At 60 km/h (37 MPH)
2/8	“D” position	1,440 – 1,600	1,610 – 1,770
	“D” position (O/D OFF condition)	1,410 – 1,550	1,550 – 1,710
8/8	“D” position	3,830 – 4,230	4,840 – 5,350
	“D” position (O/D OFF condition)	3,830 – 4,230	4,840 – 5,350

NOTE:
- Lock-up is engaged at the vehicle speed of approximately 18 km/h (12 MPH) to 40 km/h (24 MPH).
- This is only reference value with constant operation.

Stall Speed

INFOID:0000000012404611

Unit: rpm

Stall speed	2,550 – 2,980

Torque Converter

INFOID:0000000012404612

Dimension between end of converter housing and torque converter	14.0 mm (0.55 in)

Heater Thermostat

INFOID:0000000012404613

Standard

Valve opening temperature	71°C (159°F)
Maximum valve lift	5.0 mm / 85°C (0.197 in / 185°F)
Valve closing temperature	65°C (149°F)

cardiagn.com